Cisco Catalyst 9300 Series Switches Hardware Installation Guide

First Published: 2017-06-20

Last Modified: 2020-01-31

Americas Headquarters
Cisco Systems, Inc.
170 West Tasman Drive
San Jose, CA 95134-1706
USA
http://www.cisco.com
Tel: 408 526-4000
800 553-NETS (6387)
Fax: 408 527-0883

CONTENTS

PREFACE

Preface ix

Document Conventions ix

Related Documentation xi

Obtaining Documentation and Submitting a Service Request xi

CHAPTER 1

Product Overview 1

Switch Models 1

Front Panel Components 4

10/100/1000 Ports 7

PoE, PoE+, Cisco UPOE and Cisco UPOE+ Ports 7

Multigigabit Ethernet Ports 8

Management Ports 8

USB Type A Port 9

Uplink Ports 9

LEDs 10

USB Console LED 11

System LED 11

Active LED 11

STACK LED 11

PoE LED 12

XPS LED 13

S-PWR LED 13

Port LEDs and Modes 14

Beacon LED 16

Network Module LEDs 17

Rear Panel 17
RFID Tag 19
RJ-45 Console Port LED 20
StackWise Ports 20
Power Supply Modules 20
Fan Module 22
StackPower Connector 23
USB 3.0 SSD Port 23
Ethernet Management Port 23
RJ-45 Console Port 24
Network Configurations 24

CHAPTER 2 **Installing a Switch** 25
Preparing for Installation 25
Safety Warnings 25
Installation Guidelines 27
Shipping Box Contents 28
Tools and Equipment 29
Verifying Switch Operation 29
Planning a Switch Data Stack 30
Switch Stacking and Power Stacking Guidelines 30
Data Stack Cabling Configurations 30
Data Stack Bandwidth and Partitioning Examples 31
Power-On Sequence for Switch Stacks 32
Planning a StackPower Stack 33
StackPower Stacking Guidelines 33
StackPower Cabling Configurations 33
StackPower Partitioning Examples 35
Installing the Switch 36
Rack-Mounting 36
Attaching the Rack-Mount Brackets 37
Mounting the Switch in a Rack 41
Installing the Switch on a Table or Shelf 43
After Switch Installation 43

Connecting the StackWise Cables 43
Connecting a StackWise-320 Cable 43
Connecting a StackWise-480 Cable 45
Connecting to the StackPower Ports 47
Installing a Network Module in the Switch 47
Installing and Removing Cisco Pluggable Transceiver Modules 47
Connecting Devices to the Ethernet Ports 47
10/100/1000/Multigigabit Ethernet Port Connections 48
Auto-MDIX Connections 48
PoE+ and Cisco UPOE/UPOE+ Port Connections 48

CHAPTER 3 **Installing a Network Module** 51
Network Modules Overview 51
Installing a Network Module in the Switch 52
Safety Warnings 52
Installing a Network Module 52
Network Module Port Configurations 54
C9300-NM-2Q Module 54
C9300-NM-4G Module 55
C9300-NM-4M Module 55
C9300-NM-2Y Module 56
C9300-NM-8X Module 56
C3850-NM-4-1G Module 56
C3850-NM-4-10G Module 57
C3850-NM-2-10G Module 57
C3850-NM-8-10G Module 58
C3850-NM-2-40G Module 58
Removing a Network Module 59
Installing and Removing Cisco Transceiver Modules 60
Installing a Cisco Pluggable Transceiver Module 60
Removing Cisco Pluggable Transceiver Modules 62
Finding the Network Module Serial Number 62

CHAPTER 4 **Installing a Power Supply** 65

Power Supply Modules Overview 65
Installation Guidelines 69
Installing or Replacing an AC Power Supply 70
Installing a DC Power Supply 72
Equipment That You Need 72
Grounding the Switch 73
Installing the DC Power Supply in the Switch 75
Wiring the DC Input Power Source 76
Finding the Power Supply Module Serial Number 77

CHAPTER 5 **Installing a Fan Module** 79
Fan Modules Overview 79
Installation Guidelines 80
Installing a Fan Module 80
Finding the Fan Module Serial Number 81

CHAPTER 6 **Installing a USB 3.0 SSD** 83
USB 3.0 SSD Overview 83
Installing an SSD-120G 84

CHAPTER 7 **Configuring the Switch** 87
Configuring the Switch Using the Web User Interface 87
Setting up the Switch 87
Connecting to the Switch 87
Creating User Accounts 91
Choosing Setup Options 91
Configuring Basic Device Settings 91
Configuring Your Device Based on a Site Profile 93
Configuring Switch Wide Settings 98
Configuring VLAN Settings 98
Configure STP Settings 99
Configuring DHCP, NTP, DNS and SNMP Settings 99
Configuring Port Settings 100
Configuring the Switch Using the CLI 101

Accessing the CLI Through the Console Port 101
Connecting the RJ-45 Console Port 102
Connecting the USB Console Port 102
Installing the Cisco Microsoft Windows USB Device Driver 103
Installing the Cisco Microsoft Windows 7 USB Driver 103
Uninstalling the Cisco Microsoft Windows USB Driver 104
Uninstalling the Cisco Microsoft Windows 7 USB Driver 104

APPENDIX A
Technical Specifications 105
Environmental and Physical Specifications 105
Specifications for the Power Supplies, Switches, and Fan 109
AC Power Cord Specifications 111

APPENDIX B
Connector and Cable Specifications 113
Connector Specifications 113
10/100/1000 Ports (Including PoE) 113
SFP Module Connectors 113
MPO-12 Connectors 114
Console Port 115
Cables and Adapters 115
StackWise Accessories 115
Transceiver Module Network Cables 116
Cable Pinouts 117
Console Port Adapter Pinouts 118

THE SPECIFICATIONS AND INFORMATION REGARDING THE PRODUCTS IN THIS MANUAL ARE SUBJECT TO CHANGE WITHOUT NOTICE. ALL STATEMENTS, INFORMATION, AND RECOMMENDATIONS IN THIS MANUAL ARE BELIEVED TO BE ACCURATE BUT ARE PRESENTED WITHOUT WARRANTY OF ANY KIND, EXPRESS OR IMPLIED. USERS MUST TAKE FULL RESPONSIBILITY FOR THEIR APPLICATION OF ANY PRODUCTS.

THE SOFTWARE LICENSE AND LIMITED WARRANTY FOR THE ACCOMPANYING PRODUCT ARE SET FORTH IN THE INFORMATION PACKET THAT SHIPPED WITH THE PRODUCT AND ARE INCORPORATED HEREIN BY THIS REFERENCE. IF YOU ARE UNABLE TO LOCATE THE SOFTWARE LICENSE OR LIMITED WARRANTY, CONTACT YOUR CISCO REPRESENTATIVE FOR A COPY.

The following information is for FCC compliance of Class A devices: This equipment has been tested and found to comply with the limits for a Class A digital device, pursuant to part 15 of the FCC rules. These limits are designed to provide reasonable protection against harmful interference when the equipment is operated in a commercial environment. This equipment generates, uses, and can radiate radio-frequency energy and, if not installed and used in accordance with the instruction manual, may cause harmful interference to radio communications. Operation of this equipment in a residential area is likely to cause harmful interference, in which case users will be required to correct the interference at their own expense.

The following information is for FCC compliance of Class B devices: This equipment has been tested and found to comply with the limits for a Class B digital device, pursuant to part 15 of the FCC rules. These limits are designed to provide reasonable protection against harmful interference in a residential installation. This equipment generates, uses and can radiate radio frequency energy and, if not installed and used in accordance with the instructions, may cause harmful interference to radio communications. However, there is no guarantee that interference will not occur in a particular installation. If the equipment causes interference to radio or television reception, which can be determined by turning the equipment off and on, users are encouraged to try to correct the interference by using one or more of the following measures:

- Reorient or relocate the receiving antenna.
- Increase the separation between the equipment and receiver.
- Connect the equipment into an outlet on a circuit different from that to which the receiver is connected.
- Consult the dealer or an experienced radio/TV technician for help.

Modifications to this product not authorized by Cisco could void the FCC approval and negate your authority to operate the product.

The Cisco implementation of TCP header compression is an adaptation of a program developed by the University of California, Berkeley (UCB) as part of UCB's public domain version of the UNIX operating system. All rights reserved. Copyright © 1981, Regents of the University of California.

NOTWITHSTANDING ANY OTHER WARRANTY HEREIN, ALL DOCUMENT FILES AND SOFTWARE OF THESE SUPPLIERS ARE PROVIDED "AS IS" WITH ALL FAULTS. CISCO AND THE ABOVE-NAMED SUPPLIERS DISCLAIM ALL WARRANTIES, EXPRESSED OR IMPLIED, INCLUDING, WITHOUT LIMITATION, THOSE OF MERCHANTABILITY, FITNESS FOR A PARTICULAR PURPOSE AND NONINFRINGEMENT OR ARISING FROM A COURSE OF DEALING, USAGE, OR TRADE PRACTICE.

IN NO EVENT SHALL CISCO OR ITS SUPPLIERS BE LIABLE FOR ANY INDIRECT, SPECIAL, CONSEQUENTIAL, OR INCIDENTAL DAMAGES, INCLUDING, WITHOUT LIMITATION, LOST PROFITS OR LOSS OR DAMAGE TO DATA ARISING OUT OF THE USE OR INABILITY TO USE THIS MANUAL, EVEN IF CISCO OR ITS SUPPLIERS HAVE BEEN ADVISED OF THE POSSIBILITY OF SUCH DAMAGES.

Any Internet Protocol (IP) addresses and phone numbers used in this document are not intended to be actual addresses and phone numbers. Any examples, command display output, network topology diagrams, and other figures included in the document are shown for illustrative purposes only. Any use of actual IP addresses or phone numbers in illustrative content is unintentional and coincidental.

All printed copies and duplicate soft copies of this document are considered uncontrolled. See the current online version for the latest version.

Cisco has more than 200 offices worldwide. Addresses and phone numbers are listed on the Cisco website at www.cisco.com/go/offices.

Cisco and the Cisco logo are trademarks or registered trademarks of Cisco and/or its affiliates in the U.S. and other countries. To view a list of Cisco trademarks, go to this URL: www.cisco.com go trademarks. Third-party trademarks mentioned are the property of their respective owners. The use of the word partner does not imply a partnership relationship between Cisco and any other company. (1721R)

© 2017–2020 Cisco Systems, Inc. All rights reserved.

Preface

- Document Conventions , on page ix
- Related Documentation, on page xi
- Obtaining Documentation and Submitting a Service Request, on page xi

Document Conventions

This document uses the following conventions:

Convention	Description
^ or Ctrl	Both the ^ symbol and Ctrl represent the Control (Ctrl) key on a keyboard. For example, the key combination **^D** or **Ctrl-D** means that you hold down the Control key while you press the D key. (Keys are indicated in capital letters but are not case sensitive.)
bold font	Commands and keywords and user-entered text appear in **bold** font.
Italic font	Document titles, new or emphasized terms, and arguments for which you supply values are in *italic* font.
`Courier` font	Terminal sessions and information the system displays appear in `courier` font.
`Bold Courier` font	**`Bold Courier`** font indicates text that the user must enter.
[x]	Elements in square brackets are optional.
...	An ellipsis (three consecutive nonbolded periods without spaces) after a syntax element indicates that the element can be repeated.
|	A vertical line, called a pipe, indicates a choice within a set of keywords or arguments.
[x | y]	Optional alternative keywords are grouped in brackets and separated by vertical bars.
{x | y}	Required alternative keywords are grouped in braces and separated by vertical bars.

Convention	Description
[x {y | z}]	Nested set of square brackets or braces indicate optional or required choices within optional or required elements. Braces and a vertical bar within square brackets indicate a required choice within an optional element.
string	A nonquoted set of characters. Do not use quotation marks around the string or the string will include the quotation marks.
< >	Nonprinting characters such as passwords are in angle brackets.
[ ]	Default responses to system prompts are in square brackets.
!, #	An exclamation point (!) or a pound sign (#) at the beginning of a line of code indicates a comment line.

Reader Alert Conventions

This document may use the following conventions for reader alerts:

Note Means *reader take note*. Notes contain helpful suggestions or references to material not covered in the manual.

Tip Means *the following information will help you solve a problem.*

Caution Means *reader be careful*. In this situation, you might do something that could result in equipment damage or loss of data.

Timesaver Means *the described action saves time.* You can save time by performing the action described in the paragraph.

Warning IMPORTANT SAFETY INSTRUCTIONS

This warning symbol means danger. You are in a situation that could cause bodily injury. Before you work on any equipment, be aware of the hazards involved with electrical circuitry and be familiar with standard practices for preventing accidents. Use the statement number provided at the end of each warning to locate its translation in the translated safety warnings that accompanied this device. Statement 1071

SAVE THESE INSTRUCTIONS

Related Documentation

Note Before installing or upgrading the switch, refer to the switch Release Notes.

- Cisco Catalyst 9300 Series Switches documentation, located at: http://www.cisco.com/go/c9300
- Cisco Transceiver Modules documentation, including compatibility matrixes, located at:

  http://www.cisco.com/en/US/products/hw/modules/ps5455/tsd_products_support_series_home.html
- Cisco Validated Designs documents, located at:

  http://www.cisco.com/go/designzone

Obtaining Documentation and Submitting a Service Request

For information on obtaining documentation, submitting a service request, and gathering additional information, see the monthly *What's New in Cisco Product Documentation*, which also lists all new and revised Cisco technical documentation, at:

http://www.cisco.com/c/en/us/td/docs/general/whatsnew/whatsnew.html

Subscribe to the *What's New in Cisco Product Documentation* as a Really Simple Syndication (RSS) feed and set content to be delivered directly to your desktop using a reader application. The RSS feeds are a free service and Cisco currently supports RSS version 2.0.

CHAPTER 1

Product Overview

Cisco Catalyst 9300 Series Switches family is the stackable enterprise switching platform built for Security, IoT, Mobility, and Cloud. It has the most flexible uplink architecture with support for 1G, 10G, 25G and 40G.

Cisco Catalyst 9300 Series Switches provide support for the following features:

- 24 and 48 10/100/1000M downlink ports with data, PoE+, Cisco UPOE and Cisco UPOE+ support
- 24 and 48 100Mbps/1/2.5/5/10Gbps ports with Cisco UPOE support
- Fixed 1G or 10G uplinks or uplink modules with 1G, 10G, 25G, 40G and Multigigabit slots
- Advanced security capabilities like Encrypted Traffic Analytics (ETA), AES-256 MACSEC encryption, and TrustWorthy systems
- Local back-panel stacking solution with Stackwise-480 and Stackwise-320
- Intelligent Power Management with StackPower technology that provides power stacking among members for power redundancy
- IoT integration and policy-based automation from the edge to the cloud with SD-Access solution
- RJ-45 and USB Mini-Type B console ports
- External USB 3.0 SSD pluggable storage support

- Switch Models, on page 1
- Front Panel Components, on page 4
- Rear Panel, on page 17
- Network Configurations, on page 24

Switch Models

Table 1: Cisco Catalyst 9300 Series Switches Models and Descriptions

Switch Model	Description
C9300-24H	Stackable 24 10/100/1000 Mbps UPOE+ ports; PoE budget of 830 W with 1100 WAC power supply; supports StackWise-480 and StackPower.

Switch Model	Description
C9300-24P	Stackable 24 10/100/1000 Mbps PoE+ ports; PoE budget of 445 W with 715 WAC power supply; supports StackWise-480 and StackPower.
C9300-24S	Stackable 24 10/100/1000 Mbps SFP ports; two power supply slots with 715 WAC power supply installed by default; supports StackWise-480 and StackPower.
C9300-24T	Stackable 24 10/100/1000 Mbps Ethernet ports; 350 WAC power supply; supports StackWise-480 and StackPower.
C9300-24U	Stackable 24 10/100/1000 Mbps UPOE ports; PoE budget of 830 W with 1100 WAC power supply; supports StackWise-480 and StackPower.
C9300-24UB	Stackable 24 10/100/1000 Mbps UPOE ports that provide deep buffers and higher scale; PoE budget of 830 W with 1100 WAC power supply; supports StackWise-480 and StackPower.
C9300-24UX	Stackable 24 Multigigabit Ethernet (100 Mbps or 1/2.5/5/10 Gbps) UPOE ports; PoE budget of 560 W with 1100 WAC power supply; supports StackWise-480 and StackPower.
C9300-24UXB	Stackable 24 Multigigabit Ethernet (100 Mbps or 1/2.5/5/10 Gbps) UPOE ports that provide deep buffers and higher scale; PoE budget of 560 W with 1100 WAC power supply; supports StackWise-480 and StackPower.
C9300-48H	Stackable 48 10/100/1000 Mbps UPOE+ ports; PoE budget of 822 W with 1100 WAC power supply; supports StackWise-480 and StackPower.
C9300-48P	Stackable 48 10/100/1000 Mbps PoE+ ports; PoE budget of 437 W with 715 WAC power supply; supports StackWise-480 and StackPower.
C9300-48S	Stackable 48 10/100/1000 Mbps SFP ports; two power supply slots with 715 WAC power supply installed by default; supports StackWise-480 and StackPower.
C9300-48T	Stackable 48 10/100/1000 Mbps Ethernet ports; 350 WAC power supply; supports StackWise-480 and StackPower.
C9300-48U	Stackable 48 10/100/1000 Mbps UPOE ports; PoE budget of 822 W with 1100 WAC power supply; supports StackWise-480 and StackPower.
C9300-48UB	Stackable 48 10/100/1000 Mbps UPOE ports that provide deep buffers and higher scale; PoE budget of 822 W with 1100 WAC power supply; supports StackWise-480 and StackPower.
C9300-48UN	Stackable 48 Multigigabit Ethernet (100 Mbps or 1/2.5/5 Gbps) UPOE ports; PoE budget of 610 W with 1100 WAC power supply; supports StackWise-480 and StackPower.
C9300-48UXM	Stackable 48 (12 Multigigabit Ethernet and 36 2.5 Gbps) UPOE ports; PoE budget of 490 W with 1100 WAC power supply; supports StackWise-480 and StackPower.

Table 2: Cisco Catalyst 9300L Series Switches Models and Descriptions

Switch Model	Description
C9300L-24T-4G	Stackable 24 10/100/1000 Mbps Ethernet ports; 4x1G SFP fixed uplink ports; 350 WAC power supply; supports StackWise-320.
C9300L-24P-4G	Stackable 24 10/100/1000 Mbps PoE+ ports; 4x1G SFP fixed uplink ports; PoE budget of 505 W with 715 WAC power supply; supports StackWise-320.
C9300L-24T-4X	Stackable 24 10/100/1000 Mbps Ethernet ports; 4x10G SFP+ fixed uplink ports; 350 WAC power supply; supports StackWise-320.
C9300L-24P-4X	Stackable 24 10/100/1000 Mbps PoE+ ports; 4x10G SFP+ fixed uplink ports; PoE budget of 505 W with 715 WAC power supply; supports StackWise-320.
C9300L-48T-4G	Stackable 48 10/100/1000 Mbps Ethernet ports; 4x1G SFP fixed uplink ports; 350 WAC power supply; supports StackWise-320.
C9300L-48P-4G	Stackable 48 10/100/1000 Mbps PoE+ ports; 4x1G SFP fixed uplink ports; PoE budget of 505 W with 715 WAC power supply; supports StackWise-320.
C9300L-48T-4X	Stackable 48 10/100/1000 Mbps Ethernet ports; 4x10G SFP+ fixed uplink ports; 350 WAC power supply; supports StackWise-320.
C9300L-48P-4X	Stackable 48 10/100/1000 Mbps PoE+ ports; 4x10G SFP+ fixed uplink ports; PoE budget of 505 W with 715 WAC power supply; supports StackWise-320.
C9300L-48PF-4G	Stackable 48 10/100/1000 Mbps PoE+ ports; 4x1G SFP+ fixed uplink ports; PoE budget of 890 W with 1100 WAC power supply; supports StackWise-320.
C9300L-48PF-4X	Stackable 48 10/100/1000 Mbps PoE+ ports; 4x10G SFP+ fixed uplink ports; PoE budget of 890 W with 1100 WAC power supply; supports StackWise-320.
C9300L-24UXG-4X	Stackable 16 10/100/1000 Mbps and 8 Multigigabit Ethernet (100 Mbps or 1/2.5/5/10 Gbps) UPOE ports; 4x10G SFP+ fixed uplink ports; PoE budget of 880 W with 1100 WAC power supply; supports StackWise-320.
C9300L-24UXG-2Q	Stackable 16 10/100/1000 Mbps and 8 Multigigabit Ethernet (100 Mbps or 1/2.5/5/10 Gbps) UPOE ports; 2x40G QSFP+ fixed uplink ports; PoE budget of 722 W with 1100 WAC power supply; supports StackWise-320.
C9300L-48UXG-4X	Stackable 36 10/100/1000 Mbps and 12 Multigigabit Ethernet (100 Mbps or 1/2.5/5/10 Gbps) UPOE ports; 4x10G SFP+ fixed uplink ports; PoE budget of 675 W with 1100 WAC power supply; supports StackWise-320.
C9300L-48UXG-2Q	Stackable 36 10/100/1000 Mbps and 12 Multigigabit Ethernet (100 Mbps or 1/2.5/5/10 Gbps) UPOE ports; 2x40G QSFP+ fixed uplink ports; PoE budget of 675 W with 1100 WAC power supply; supports StackWise-320.

Front Panel Components

Front Panel Components of a Cisco Catalyst 9300 Series Switch

- 24 or 48 downlink ports of one of these types:
  - 10/100/1000
  - 10/100/1000 PoE+
  - 10/100/1000 Cisco UPOE/UPOE+
  - Multigigabit Ethernet 100/1000/2500/5000/10000 Cisco UPOE
- Uplink network module slots
- USB Type A connector
- USB mini-Type B (console) port
- LEDs
- Mode button
- Beacon LED (UID button)

All the switch models have similar components. See the following illustration for example.

Note The Catalyst 9300 switches might have slight cosmetic differences on the bezels.

Figure 1: C9300-48P Switch Front Panel

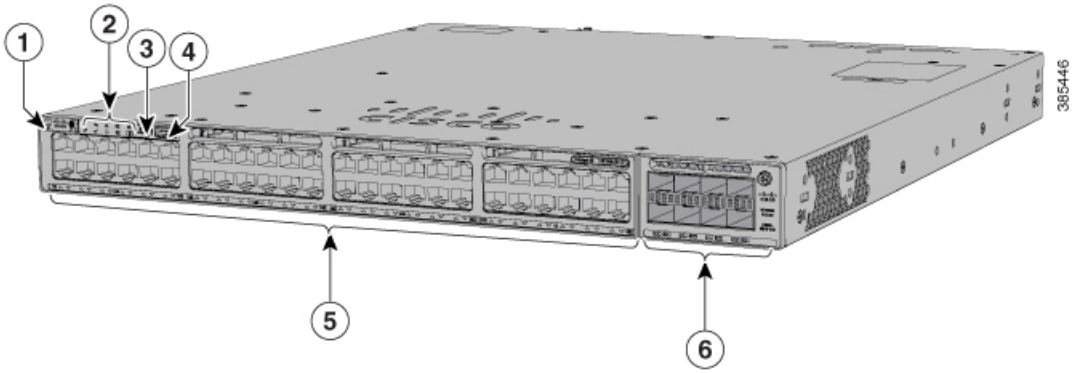

1	Beacon LED (UID button)	4	USB Type A storage port
2	Status LEDs	5	10/100/1000 PoE+ ports
3	USB mini-Type B (console) port	6	Network module slots

Figure 2: C9300-48UXM Switch Front Panel

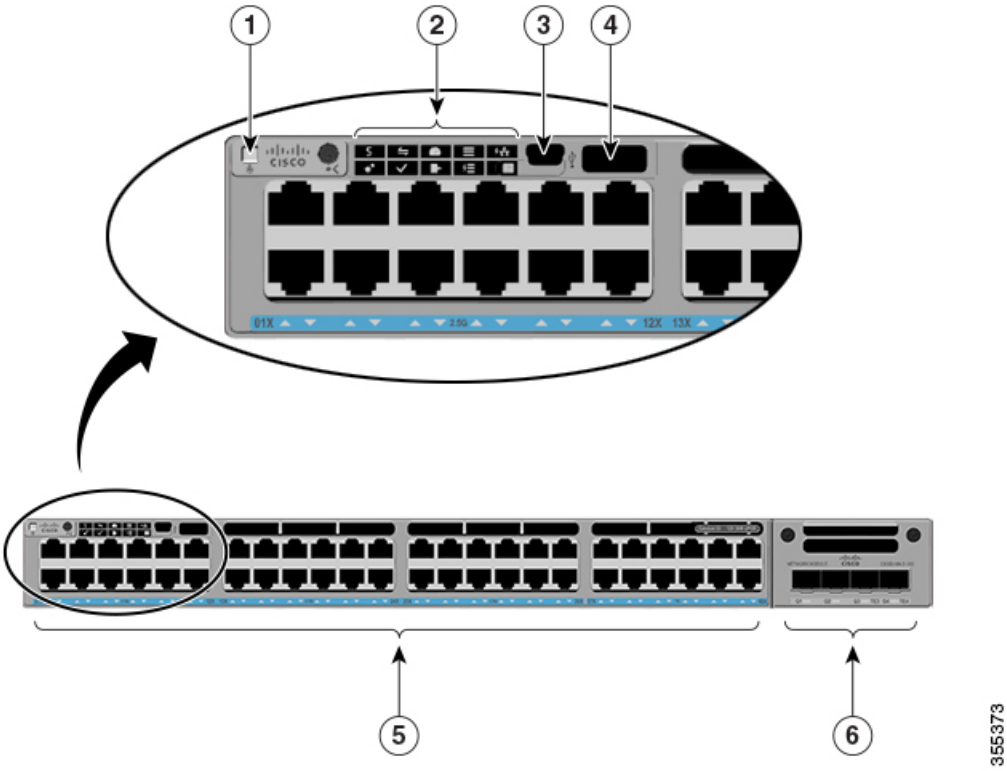

1	Beacon LED (UID button)	4	USB Type A storage port
2	Status LEDs	5	Ports 1-36 of 100/1000/2.5G and ports 37-48 of 100/1000/2.5G/5G/10G
3	USB mini-Type B (console) port	6	Network module slots

Figure 3: Front panel components of C9300-48S

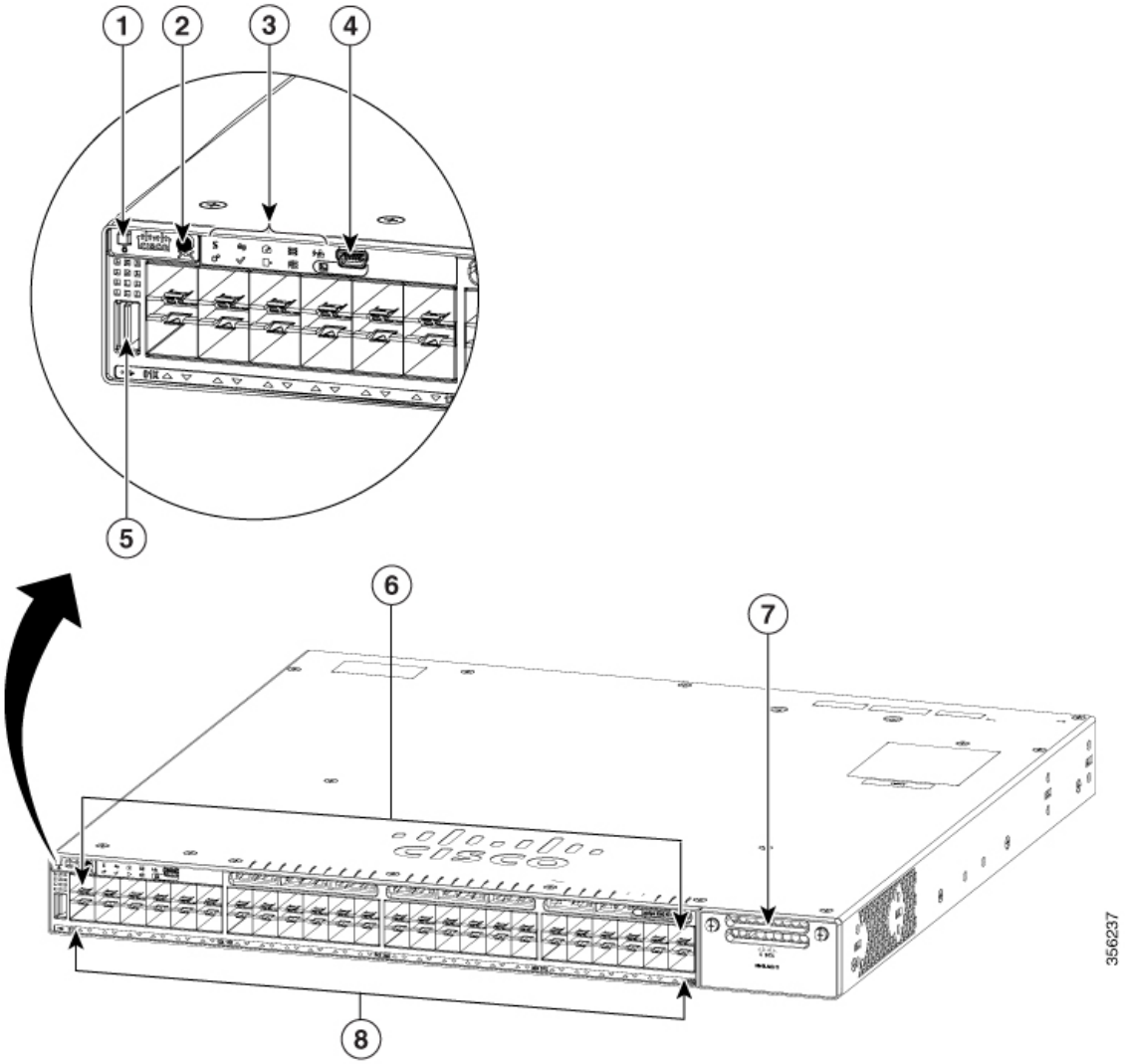

1	Beacon LED (UID button)	5	USB Type A storage port
2	Mode button	6	10/100/1000 SFP ports
3	Status LEDs	7	Uplink network module slots
4	USB mini-Type B (console) port	8	Port LEDs

Front panel components of a Cisco Catalyst 9300L Series switch

Figure 4: C9300L-48P-4X Switch Front Panel

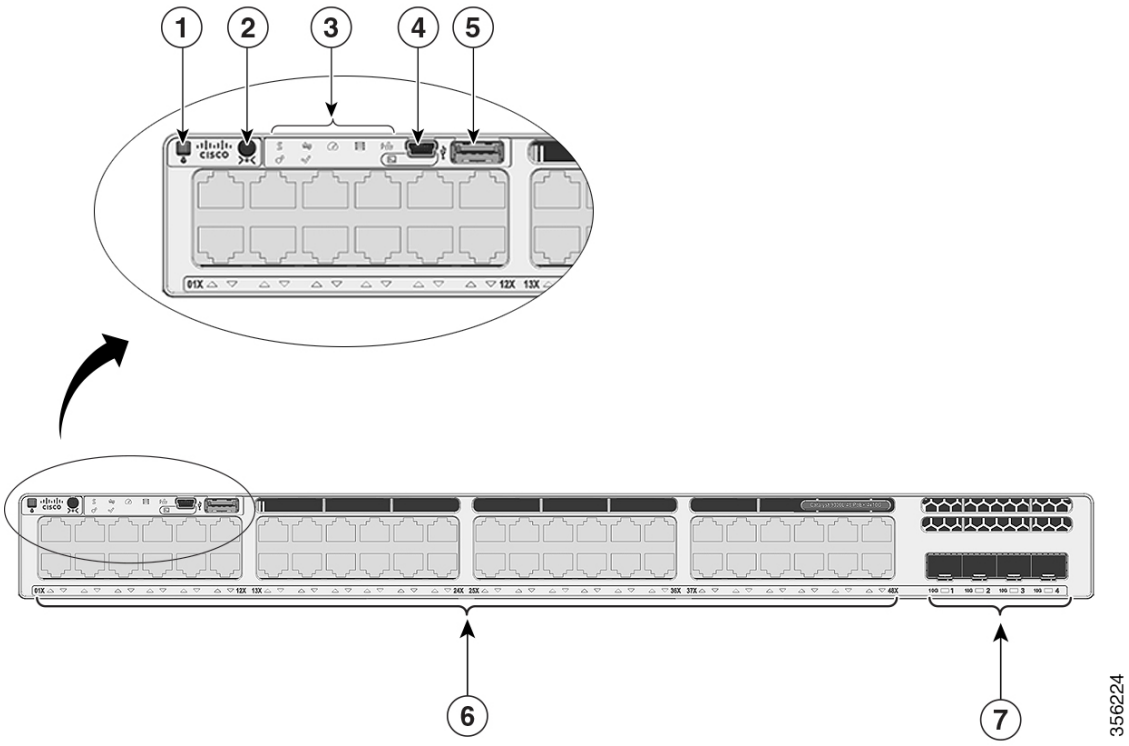

1	Beacon LED (UID button)	5	USB Type A storage port
2	Mode button	6	10/100/1000 PoE+ ports
3	Status LEDs	7	Fixed uplink ports
4	USB mini-Type B (console) port	-	-

10/100/1000 Ports

The 10/100/1000 ports use RJ-45 connectors with Ethernet pinouts. The maximum cable length is 328 feet (100 meters). The 100BASE-TX and 1000BASE-T traffic requires twisted pair (UTP) cable of Category 5 or higher. The 10BASE-T traffic can use Category 3 cable or higher.

PoE, PoE+, Cisco UPOE and Cisco UPOE+ Ports

The PoE+ and Cisco Universal Power Over Ethernet (Cisco UPOE and Cisco UPOE+) ports use the same connectors as described in 10/100/1000/Multigigabit Ethernet Port Connections, on page 48. They provide:

- PoE+ ports: Support for IEEE 802.3af-compliant powered devices (up to 15.4 W PoE per port) and support for IEEE 802.3at-compliant powered devices (up to 30 W PoE+ per port).

- Cisco UPOE ports: Support for Type 1 (IEEE 802.3af), Type 2 (IEEE 802.3at), Type 3 (IEEE 802.3bt), and Cisco UPOE powered devices delivering up to 60 W PoE per port. The maximum total PoE power in a 1RU switch is 1800 W.
- Cisco UPOE+ ports: Support for Type 1 (IEEE 802.3af), Type 2 (IEEE 802.3at), Type 3 (IEEE 802.3bt), Type 4 (IEEE 802.3bt), and Cisco UPOE powered devices delivering up to 90 W per port.
- Support for pre-standard Cisco powered devices.
- Configuration for StackPower. When the switch internal power supply module(s) cannot support the total load, StackPower configurations allow the switch to leverage power available from other switches.
- Configurable support for Cisco intelligent power management, including enhanced power negotiation, power reservation, and per-port power policing.

See the Power Supply Modules, on page 20 for the power supply matrix that defines the available PoE, PoE+ and Cisco UPOE/UPOE+ power per port. The output of the PoE+ or Cisco UPOE/UPOE+ circuit has been evaluated as a Limited Power Source (LPS) per IEC 60950-1.

Multigigabit Ethernet Ports

The Multigigabit (mGig) Ethernet ports can be configured to auto-negotiate multiple speeds on switch ports, and support 100 Mbps, 1 Gbps, 2.5 Gbps, and 5 Gbps speeds on Category 5e (Cat5e) cables, and up to 10 Gbps over Category 6 (Cat6) and Category 6A (Cat6A) cables.

Note Multigigabit ports do not support half duplex mode. Use full duplex mode.

The Multigigabit Ethernet ports support PoE and PoE+ for all the supported speeds and cable types. The following table lists the cable types and speed.

Cable Type	100Mbps	1G	2.5G	5G	10G
Cat5E	Yes	Yes	Yes	Yes	N/A
Cat6	Yes	Yes	Yes	Yes	Yes (55meters)
Cat6A	Yes	Yes	Yes	Yes	Yes

Management Ports

The management ports connect the switch to a PC running Microsoft Windows or to a terminal server.

- Ethernet management port. See Ethernet Management Port, on page 23.
- RJ-45 console port (EIA/TIA-232). See RJ-45 Console Port, on page 24.
- USB mini-Type B console port (5-pin connector).

The 10/100/1000 Ethernet management port connection uses a standard RJ-45 crossover or straight-through cable. The RJ-45 console port connection uses the supplied RJ-45-to-DB-9 female cable. The USB console

port connection uses a USB Type A to 5-pin mini-Type B cable. The USB console interface speeds are the same as the RJ-45 console interface speeds.

If you use the USB mini-Type B console port, the Cisco Windows USB device driver must be installed on any PC connected to the console port (for operation with Microsoft Windows). Mac OS X or Linux do not require special drivers.

The 4-pin mini-Type B connector resembles the 5-pin mini-Type B connectors. They are not compatible. Use only the 5-pin mini-Type B.

Figure 5: USB Mini-Type B Port

This illustration shows a 5-pin mini-Type B USB port. 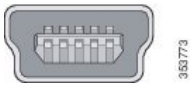

With the Cisco Windows USB device driver, you can connect and disconnect the USB cable from the console port without affecting Windows HyperTerminal operations.

The console output always goes to both the RJ-45 and the USB console connectors, but the console input is active on only one of the console connectors at any one time. The USB console takes precedence over the RJ-45 console. When a cable is connected into the USB console port, the RJ-45 console port becomes inactive. Conversely, when the USB cable is disconnected from the USB console port, the RJ-45 port becomes active.

You can use the command-line interface (CLI) to configure an inactivity timeout which reactivates the RJ-45 console if the USB console has been activated and no input activity has occurred on the USB console for a specified time.

After the USB console deactivates due to inactivity, you cannot use the CLI to reactivate it. Disconnect and reconnect the USB cable to reactivate the USB console. For information on using the CLI to configure the USB console interface, see the Software Configuration Guide.

USB Type A Port

The USB Type A port provides access to external USB flash devices (also known as thumb drives or USB keys).

The port supports Cisco USB flash drives with capacities from 128 MB to 8 GB (USB devices with port densities of 128 MB, 256 MB, 1 GB, 4 GB, and 8 GB are supported). When combined with stacking, you can upgrade other switches in the stack from an USB key inserted in any switch within the stack. Cisco IOS software provides standard file system access to the flash device: read, write, erase, and copy, as well as the ability to format the flash device with a FAT file system.

It provides you with the ability to automatically upgrade the internal flash with the USB drive's configuration and image for emergency switch recovery using USB auto-upgrade. This feature checks the internal flash for a bootable image and configuration and if either image or the configuration is not available, then the USB drive is checked for boot images and configuration. If the boot image and configuration are available, these are copied to flash for the reboot.

Uplink Ports

The Cisco Catalyst 9300 Series switches support both fixed and modular uplinks. The C9300 switch models support optional hot-swappable network modules that provide uplink ports to connect to other devices. The C9300L switches provide fixed uplink ports that support 10G and 1G SFP/SFP+ modules.

The switch generates logs when you insert or remove a network module with SFP/SFP+/SFP28 ports.

The following table lists the optional Cisco Catalyst 9300 uplink network modules. In addition, Cisco Catalyst 9300 Series switches also support 3850 uplink network modules. For the complete list of supported network modules, see Network Modules Overview, on page 51.

Table 3: Network Modules

Network Module[1]	Description
C9300-NM-4G	This module has four 1G SFP module slots. Any combination of standard SFP modules are supported. SFP+ modules are not supported. If you insert an SFP+ module in the 1G network module, the SFP+ module does not operate, and the switch logs an error message.
C9300-NM-8X	This module has eight 10G slots with an SFP+ port in each slot. Each port supports a 1G or 10G connection. Any combination of SFP and SFP+ modules are supported.
C9300-NM-2Q	This module has two 40G slots with a QSFP+ connector in each slot.
C9300-NM-4M	This module has four Multigigabit (mGig) module slots.
C9300-NM-2Y	This module has two 25 Gigabit Ethernet SFP28 module slots. Any combination of SFP, SFP+ and SFP28 modules are supported.
C9300-NM-BLANK	Insert this blank module when the switch has no uplink ports (this is required for sufficient air flow).

[1] All network modules are hot-swappable.

For information about the network modules, see the Installing a Network Module in the Switch, on page 52. For cable specifications, see Cables and Adapters, on page 115.

LEDs

You can use the switch LEDs to monitor switch activity and its performance.

Figure 6: Switch Front Panel LEDs

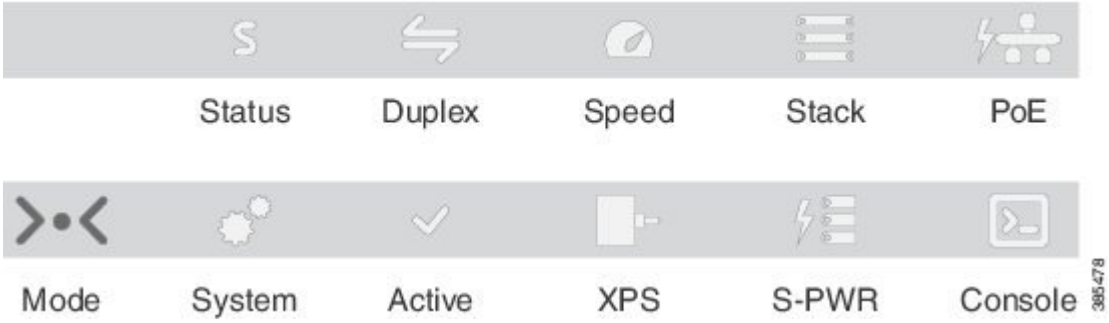

Note XPS and S-PWR LEDs are applicable only for C9300 switches.

USB Console LED

The USB console LED shows whether there is an active USB connection to the port.

Table 4: USB Console LED

LED	Color	Description
USB console port	Green	USB console port is active.
	Off	The USB is disabled.

System LED

Table 5: System LED

Color	System Status
Off	System is not powered on.
Green	System is operating normally.
Blinking green	System is loading the software.
Amber	System is receiving power but is not functioning properly.
Blinking amber	There is a fault with one of the following: • Network module (non traffic-related) • Power supply • Fan module

Active LED

Table 6: Active LED

Color	Description
Off	Switch is not the active switch.
Green	Switch is the active switch or a standalone switch.
Slow blinking green	Switch is in stack standby mode.
Amber	An error occurred when the switch was selecting the active switch, or another type of stack error occurred.

STACK LED

The STACK LED shows the sequence of member switches in a stack. Up to eight switches can be members of a stack. The first eight port LEDs show the member number of a switch in a stack.

Figure 7: STACK LED

This figure shows the LEDs on for each switch. When you press the Mode button to select the STACK LED, the corresponding port LEDs will blink green for each switch. For example, for switch 1, port 1 will blink green and the rest of the LEDs will be off. On switch 2, port 2 will blink green and the rest of the LEDs will be off. The same behavior will be seen with the remaining switches in the stack.

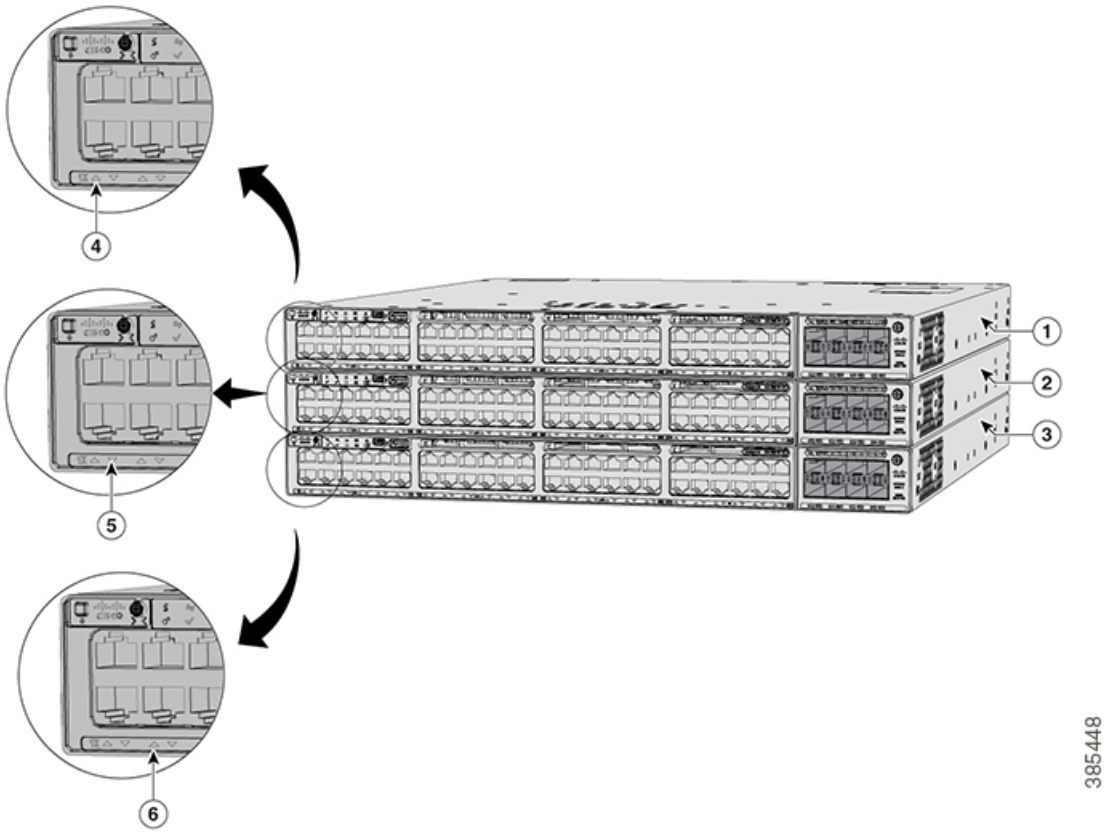

1	Stack member 1	4	LED blinks green to show that this is switch 1 in the stack.
2	Stack member 2	5	LED blinks green to show that this is switch 2 in the stack.
3	Stack member 3	6	LED blinks green to show that this is switch 3 in the stack.

PoE LED

The PoE LED indicates the status of the PoE mode: either PoE, PoE+, or Cisco UPOE.

Table 7: PoE LED

Color	Description
Off	PoE mode is not selected. None of the 10/100/1000 ports have been denied power or are in a fault condition.
Green	PoE mode is selected, and the port LEDs show the PoE mode status.
Blinking amber	PoE mode is not selected. At least one of the 10/100/1000 ports has been denied power, or at least one of the 10/100/1000 ports has a PoE mode fault.

XPS LED

Table 8: XPS LED

Color	Description
Off	XPS cable is not installed. Switch is in StackPower mode.
Green	XPS is connected and ready to provide back-up power.
Blinking green	XPS is connected but is unavailable because it is providing power to another device (redundancy has been allocated to a neighboring device).
Amber	The XPS is in standby mode or in a fault condition. See the XPS 2200 documentation for information about the standby mode and fault conditions.
Blinking amber	The power supply in a switch has failed, and the XPS is providing power to that switch (redundancy has been allocated to this device).

For information about the XPS 2200, see the *Cisco eXpandable Power System 2200 Hardware Installation Guide* on Cisco.com:

http://www.cisco.com/go/xps2200_hw

S-PWR LED

Table 9: S-PWR LED

Color	Description
Off	StackPower cable is not connected, or the switch is in standalone mode.
Green	Each StackPower port is connected to another switch.
Blinking green	This appears on the switch in a StackPower ring configuration that detects an open ring or has only one StackPower cable connected.
Amber	There is a fault: load shedding is occurring, a StackPower cable is defective, or an administrative action is required. See the switch software configuration guide for information about configuring StackPower.

Color	Description
Blinking amber	The StackPower budget is not sufficient to meet current power demands.

Port LEDs and Modes

Each Ethernet port, 1-Gigabit Ethernet module slot, and 10-Gigabit Ethernet module slot has a port LED. These port LEDs, as a group or individually, display information about the switch and about the individual ports. The port mode determines the type of information shown by the port LEDs.

To select or change a mode, press the Mode button until the desired mode is highlighted. When you change port modes, the meanings of the port LED colors also change.

When you press the Mode button on any switch in the switch stack, all the stack switches change to show the same selected mode. For example, if you press the Mode button on the active switch to show the SPEED LED, all the other switches in the stack also show the SPEED LED.

Table 10: Port Mode LEDs

Mode LED	Port Mode	Description
STAT	Port status	The port status. This is the default mode.
SPEED	Port speed	The port operating speed: 10, 100, or 1000 Mb/s.
DUPLX	Port duplex mode	The port duplex mode: full duplex or half duplex.
ACTV	Active	The active switch status.
STACK	Stack member status StackWise port status	Stack member status. The StackWise port status. See STACK LED, on page 11.
PoE[2]	The PoE+ port status.	The PoE+ port status.

[2] Only switches with PoE+ ports.

Table 11: Meaning of Switch LED Colors in Different Modes

Port Mode	Port LED Color	Meaning
STAT (port status)	Off	No link, or port was administratively shut down.
	Green	Link present, no activity.
	Blinking green	Activity. Port is sending or receiving data.
	Alternating green-amber	Link fault. Error frames can affect connectivity, and errors such as excessive collisions, CRC errors, and alignment and jabber errors are monitored for a link-fault indication.
	Amber	Port is blocked by Spanning Tree Protocol (STP) and is not forwarding data. After a port is reconfigured, the port LED can be amber for up to 30 seconds as STP checks the switch for possible loops.
SPEED	**10/100/1000/SFP ports**	
	Off	Port is operating at 10 Mb/s.
	Green	Port is operating at 100 Mb/s.
	Single green flash (on for 100 ms, off for 1900 ms)	Port is operating at 1000 Mb/s.
	Blinking twice	Port is operating at 2500, 5000 or 10000 Mb/s
	Network module slots	
	Off	Port is not operating.
	Blinking green	Port is operating at up to 10 Gb/s.
DUPLX (duplex)	Off	Port is operating in half duplex.
	Green	Port is operating in full duplex.
ACTV (data active switch)	Off	The switch is not the active switch. **Note** For a standalone switch, this LED is off.
	Green	The switch is the active switch.
	Amber	Error during active switch election.
	Blinking green	Switch is a standby member of a data stack and assumes active responsibilities if the current active switch fails.

Port Mode	Port LED Color	Meaning
STACK (stack member)	Off	No stack member corresponding to that member number.
	Blinking green	Stack member number.
	Green	Member numbers of other stack member switches.
PoE+[3]	Off	PoE+ is off. If the powered device is receiving power from an AC power source, the port LED is off even if the device is connected to the switch port.
	Green	PoE+ is on. The port LED is green when the switch port is providing power.
	Alternating green-amber	PoE+ is denied because providing power to the powered device will exceed the switch power capacity.
	Blinking amber	PoE+ is off due to a fault or because it has exceeded a limit set in the switch software. **Caution** PoE+ faults occur when noncompliant cabling or powered devices are connected to a PoE+ port. Use only standard-compliant cabling to connect Cisco prestandard IP Phones and wireless access points or IEEE 802.3af-compliant devices to PoE+ ports. You must remove from the network any cable or device that causes a PoE+ fault.
	Amber	PoE+ for the port has been disabled. **Note** PoE+ is enabled by default.

[3] Only switches with PoE or PoE+ ports.

Beacon LED

The UID and the Beacon LED can be turned on by the administrator to indicate that the switch needs attention. It helps the administrator identify the switch. The beacon can be turned on by either pressing the UID button on the switch front panel, or by using the CLI. There is a blue beacon on the front and rear panel of the switch. The blue beacon on the front panel is a button labeled UID, and on the back panel it is a LED labeled BEACON.

Color/State	Description
Solid blue	The operator has indicated that the system needs attention.

Network Module LEDs

Color	Network Module Link Status
Off	Link is off.
Green	Link is on; no activity.
Blinking green	Activity on a link; no faults. **Note** The LED will blink green even when there is very little control traffic.
Blinking amber	Link is off due to a fault or because it has exceeded a limit set in the switch software. **Caution** Link faults occur when noncompliant cabling is connected to an SFP/SFP+/SFP28 port. Use only standard-compliant cabling to connect to Cisco SFP/SFP+/SFP28 ports. You must remove from the network any cable or device that causes a link fault.
Amber	Link for the SFP/SFP+/SFP28 has been disabled.

Rear Panel

The switch rear panel includes StackWise connectors, StackPower or XPS connectors, ports, fan modules, and power supply modules.

Figure 8: Switch Rear Panel of a Cisco Catalyst 9300 Series Switch

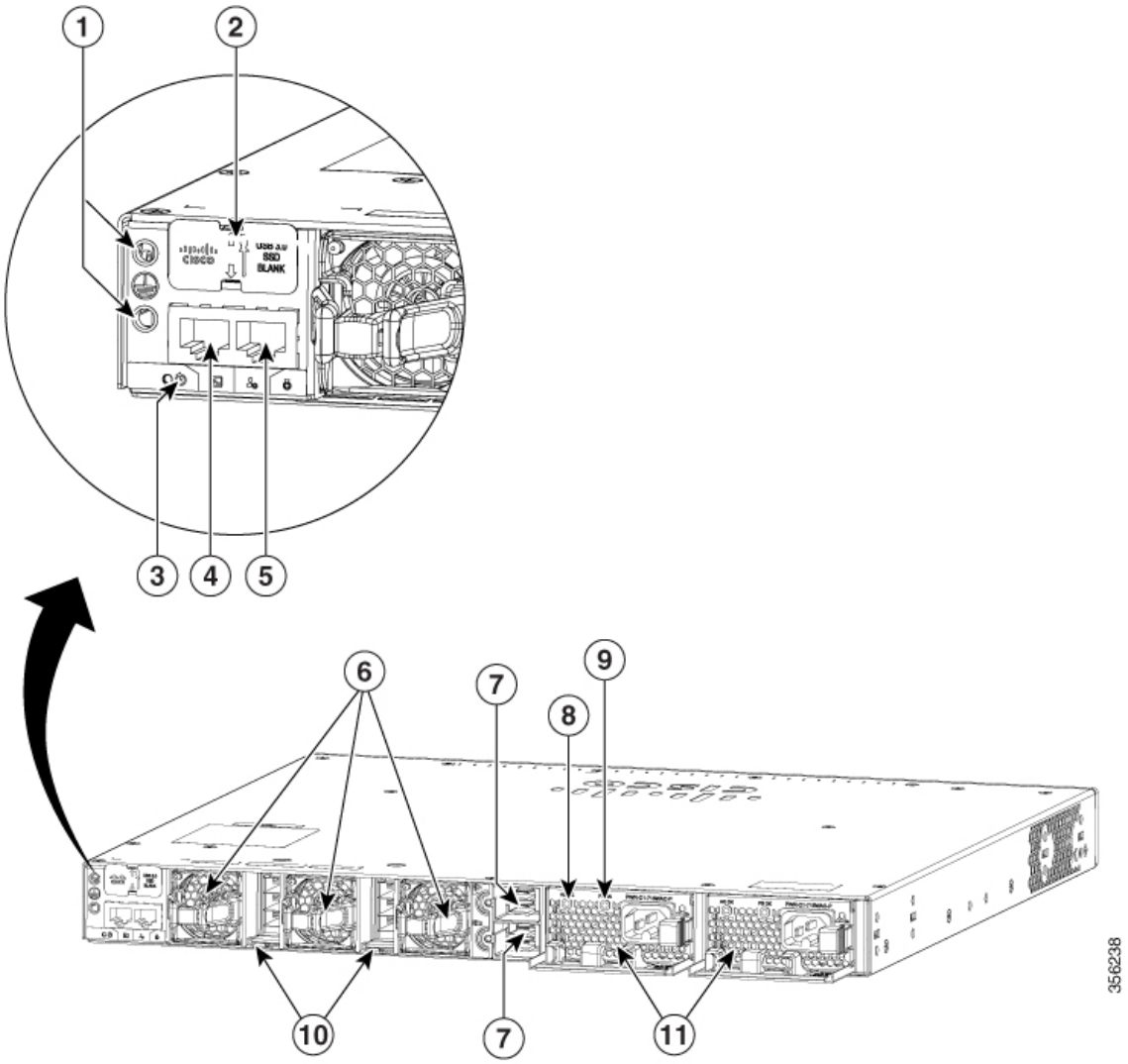

1	Ground connectors	7	StackPower connectors
2	USB3.0–SSD port	8	AC OK (input) status LED
3	BEACON LED	9	PS OK (output) status LED
4	CONSOLE (RJ-45 console port)	10	StackWise-480 port connectors
5	MGMT (RJ-45 10/100/1000 management port)	11	Power supply modules
6	Fan modules	-	-

Figure 9: Switch Rear Panel of a Cisco Catalyst 9300L Series Switch

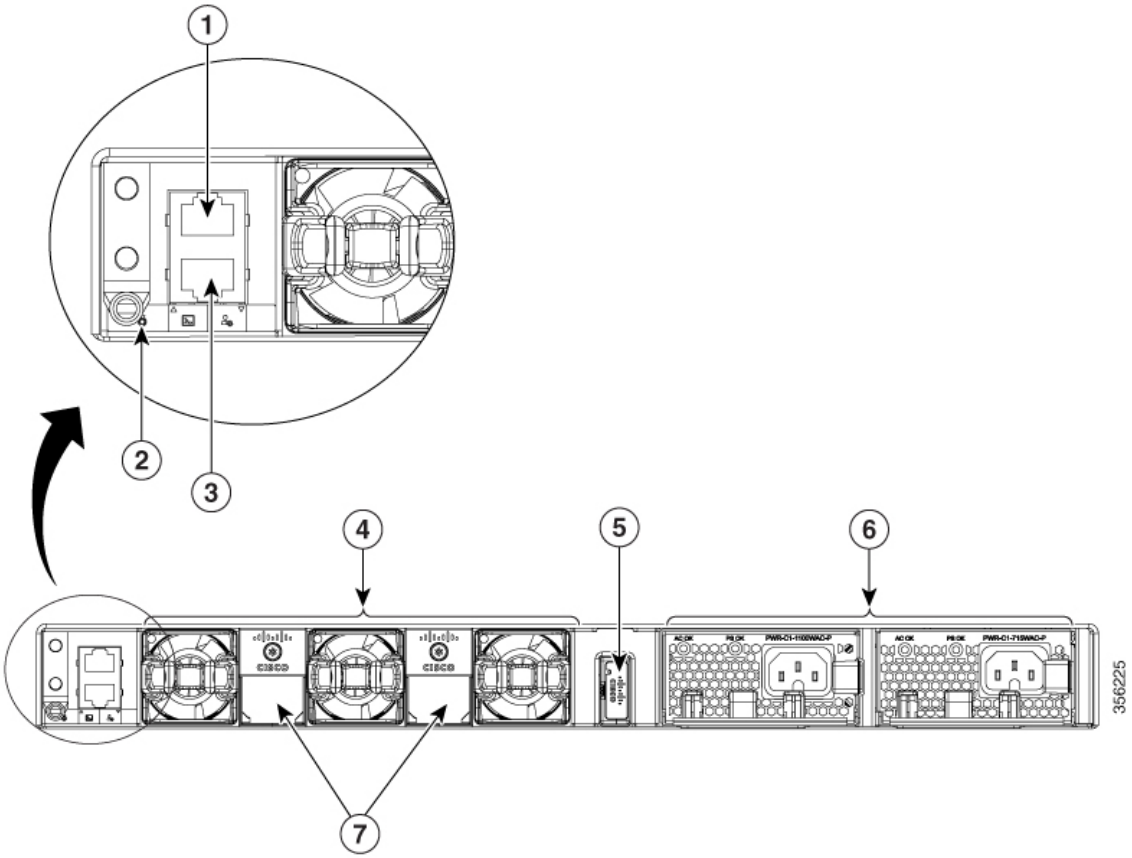

1	CONSOLE (RJ-45 console port)	5	USB3.0 SSD port
2	BEACON LED	6	Power supply modules
3	MGMT (RJ-45 10/100/1000 management port)	7	StackWise-320 port connectors
4	Fan modules	-	-

RFID Tag

The chassis has a built-in,passive RFID tag that uses UHF RFID technology and requires an RFID reader with compatible software. It provides auto-identification capabilities for asset management and tracking. The RFID tags are compatible with the Generation 2 GS1 EPC Global Standard and are ISO 18000-6C compliant. They operate in the 860- to 960-MHz UHF band. For more information, see Radio Frequency Identification (RFID) on Cisco Catalyst 9000 Family Switches White Paper.

RJ-45 Console Port LED

Table 12: RJ-45 Console Port LED

Color	RJ-45 Console Port Status
Off	RJ-45 console is disabled. USB console is active.
Green	RJ-45 console is enabled. USB console is disabled.

StackWise Ports

StackWise ports are used to connect switches in StackWise stacking configurations. The switch ships with a 0.5-meter StackWise cable that you can use to connect the StackWise ports. For more information on StackWise cables, see Connecting the StackWise Cables, on page 43.

Caution Use only approved cables, and connect only to similar Cisco equipment. Equipment might be damaged if connected to nonapproved Cisco cables or equipment.

Power Supply Modules

The switches are powered through one or two internal power supply modules.

Following are the supported power supply modules:

- PWR-C1-350WAC
- PWR-C1-715WAC
- PWR-C1-1100WAC
- PWR-C1-350WAC-P
- PWR-C1-715WAC-P
- PWR-C1-1100WAC-P
- PWR-C1-715WDC

The switch has two internal power supply module slots. You can use two AC modules or one power supply module and a blank module.

The switch can operate with either one or two active power supply modules or with power supplied by a stack. A switch that is in a StackPower stack can operate with power supplied by other switches in the stack.

Switch Models, on page 1 shows the default power supply module that ships with each switch model. All the power supply modules (except the blank modules) have internal fans. All switches ship with a blank power supply module in the second power supply slot.

Caution Do not operate the switch with one power supply module slot empty. Always install a blank module in the empty slot to keep the operating temperature and fan noise lower.

The following tables show the PoE available and PoE requirements for PoE switch models.

Table 13: Available PoE with Default Power Supply

Switch Model	Default Power Supply	Available PoE
C9300 Series Switches		
C9300-24T	PWR-C1-350WAC	-
C9300-48T		-
C9300-24S	PWR-C1-715WAC	-
C9300-48P		437 W
C9300-24P		445 W
C9300-48S		-
C9300-24H	PWR-C1-1100WAC	830 W
C9300-24U		830 W
C9300-24UB		830 W
C9300-24UX		560 W
C9300-24UXB		560 W
C9300-48U		822 W
C9300-48UB		822 W
C9300-48UN		610 W
C9300-48UXM		490 W
C9300-48H		822 W
C9300L Series Switches		
C9300L-24T-4G	PWR-C1-350WAC	-
C9300L-24T-4X		-
C9300L-48T-4G		-
C9300L-48T-4X		-

Switch Model	Default Power Supply	Available PoE
C9300L-24P-4G	PWR-C1-715WAC	505 W
C9300L-24P-4X		505 W
C9300L-48P-4G		505 W
C9300L-48P-4X		505 W
C9300L-48PF-4G	PWR-C1-1100WAC	890 W
C9300L-48PF-4X		890 W
C9300L-24UXG-4X		880 W
C9300L-24UXG-2Q		722 W
C9300L-48UXG-4X		675 W
C9300L-48UXG-2Q		675 W

Depending on the power supplies configured, C9300-24H can provide a maximum of 2160 W and C9300-48H can provide a maximum of 2880 W of UPOE+ power.

The power supply modules have two status LEDs.

Table 14: Switch Power Supply Module LEDs

AC OK	Description	PS OK	Description
Off	No AC input power.	Off	Output is disabled, or input is outside operating range (AC LED is off).
Green	AC input power present.	Green	Power output to switch active.
		Red	Output has failed.

Fan Module

The switch supports three internal hot-swappable 12-V fan modules (FAN-T2=) are available. The air circulation system consists of the fan modules and the power supply modules. The airflow direction is always from front to rear.

When the fan modules are operating properly, a green LED at the top left corner of the fan assembly (viewed from the rear), is ON. If the fan fails, the LED turns to amber. The switch can operate with two operational fans, but the failed fan should be replaced as soon as possible to avoid a service interruption due to a second fan fault.

Figure 10: Switch Airflow Pattern

The following illustration shows the airflow pattern for the switches. The blue arrow shows cool airflow, and the red arrow shows warm airflow.

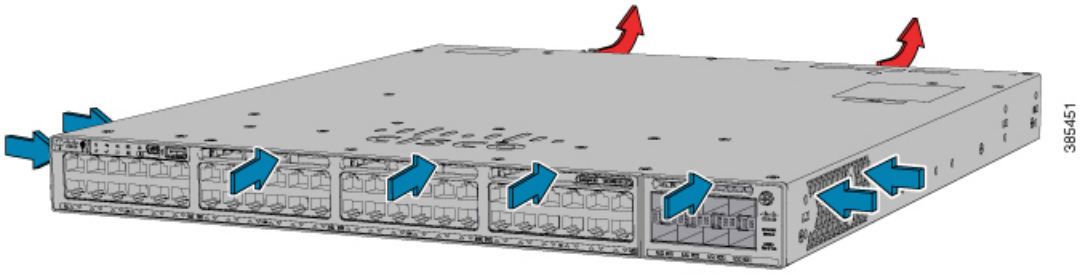

For information about installing a fan module and fan specifications, see Installing a Fan Module, on page 80.

StackPower Connector

The C9300 switches have a StackPower connector for use with Cisco StackPower cables to configure a switch power stack that includes up to four switches. A switch power stack can be configured in redundant or power-sharing mode.

You can order these StackPower cables from your Cisco sales representative:

- CAB-SPWR-30CM (0.3-meter cable)
- CAB-SPWR-150CM (1.5-meter cable)

For details about connecting StackPower cables and StackPower guidelines, see Planning a StackPower Stack, on page 33.

USB 3.0 SSD Port

To support the storage needs on the switch, the Cisco Catalyst 9300 Series Switches provide support for pluggable 120GB USB 3.0 Solid State Drive (SSD) module. The USB 3.0 SSD module slot is located at the rear panel of the switch. The storage drive can also be used to save packet captures and trace logs generated by the operating system. The USB 3.0 SSD device is field replaceable.

For information about installing a USB 3.0 SSD module, see Installing a USB 3.0 SSD, on page 83.

Ethernet Management Port

You can connect the switch to a host such as a Windows workstation or a terminal server through the 10/100/1000 Ethernet management port or one of the console ports. The 10/100/1000 Ethernet management port is a VPN routing/forwarding (VRF) interface and uses a RJ-45 crossover or straight-through cable.

Note The 10/100/1000 Ethernet management port is an RJ-45 connector that should be connected to a Windows workstation or a terminal server. Do not connect this port to another port in the same switch or to any port within the same switch stack.

The following table shows the Ethernet management port LED colors and their meanings.

Table 15: Ethernet Management Port LED

Color	Description
Green	Link up but no activity.
Blinking green	Link up and activity.
Off	Link down.

RJ-45 Console Port

The RJ-45 console port connection uses the supplied RJ-45-to-DB-9 female cable.

The following table shows the RJ-45 console port LED colors and their meanings.

Table 16: RJ-45 Console LED

Color	Description
Green	RJ-45 console port is active.
Off	The port is not active.

Network Configurations

See the switch software configuration guide for network configuration concepts and examples of using the switch to create dedicated network segments and interconnecting the segments through Fast Ethernet and Gigabit Ethernet connections.

CHAPTER 2

Installing a Switch

For initial switch setup, assigning the switch IP address, and powering on information, see the switch getting started guide on Cisco.com.

This chapter contains these topics:

- Preparing for Installation, on page 25
- Planning a Switch Data Stack, on page 30
- Data Stack Cabling Configurations, on page 30
- Planning a StackPower Stack, on page 33
- StackPower Cabling Configurations, on page 33
- Installing the Switch, on page 36
- Connecting the StackWise Cables, on page 43
- Connecting to the StackPower Ports, on page 47
- Installing a Network Module in the Switch, on page 47
- Installing and Removing Cisco Pluggable Transceiver Modules, on page 47
- Connecting Devices to the Ethernet Ports, on page 47

Preparing for Installation

Safety Warnings

This section includes the basic installation caution and warning statements. Read this section before you start the installation procedure. Translations of the warning statements appear in the Regulatory Compliance and Safety Information guide on Cisco.com.

Warning Before working on equipment that is connected to power lines, remove jewelry (including rings, necklaces, and watches). Metal objects will heat up when connected to power and ground and can cause serious burns or weld the metal object to the terminals. Statement 43

Warning Do not stack the chassis on any other equipment. If the chassis falls, it can cause severe bodily injury and equipment damage. Statement 48

Warning Ethernet cables must be shielded when used in a central office environment. Statement 171

Warning Do not work on the system or connect or disconnect cables during periods of lightning activity. Statement 1001

Warning Read the installation instructions before connecting the system to the power source. Statement 1004

Warning Class 1 laser product. Statement 1008

Warning This unit is intended for installation in restricted access areas. A restricted access area can be accessed only through the use of a special tool, lock and key, or other means of security. Statement 1017

Warning The plug-socket combination must be accessible at all times, because it serves as the main disconnecting device. Statement 1019

Warning Use copper conductors only. Statement 1025

Warning This unit might have more than one power supply connection. All connections must be removed to de-energize the unit. Statement 1028

Warning Only trained and qualified personnel should be allowed to install, replace, or service this equipment. Statement 1030

Warning Ultimate disposal of this product should be handled according to all national laws and regulations. Statement 1040

Warning To prevent the system from overheating, do not operate it in an area that exceeds the maximum recommended ambient temperature of: <113°F (45°C). Statement 1047

Warning Installation of the equipment must comply with local and national electrical codes. Statement 1074

Warning To prevent airflow restriction, allow clearance around the ventilation openings to be at least: 3 inches (7.6 cm). Statement 1076

Note The grounding architecture of this product is DC-isolated (DC-I).

Installation Guidelines

When determining where to install the switch, verify that these guidelines are met:

- Clearance to the switch front and rear panel meets these conditions:
  - Front-panel LEDs can be easily read.
  - Access to ports is sufficient for unrestricted cabling.
  - AC power cord can reach from the AC power outlet to the connector on the switch rear panel.
  - The pluggable transceiver module minimum bend radius and connector length is met. See the Cisco pluggable transceiver module documentation for more information.
- Cabling is away from sources of electrical noise, such as radios, power lines, and fluorescent lighting fixtures. Make sure that the cabling is safely away from other devices that might damage the cables.
- For switches with the optional 1100 W power supply module, first rack-mount the switch before installing the power-supply module.
- Make sure power supply modules and fan modules are securely inserted in the chassis before moving the switch.
- When connecting or disconnecting the power cord on a switch installed with a 350 W or a 715 W power supply that is installed above or below a 1100-W power supply equipped switch, you might need to remove the 1100 W power supply from the switch to access the power cord.
- Airflow around the switch and through the vents is unrestricted.
- For copper connections on Ethernet ports, cable lengths from the switch to connected devices can be up to 328 feet (100 meters).
- Temperature around the unit does not exceed 113°F (45°C). If the switch is installed in a closed or multirack assembly, the temperature around it might be greater than normal room temperature.
- Humidity around the switch does not exceed 95 percent.
- Altitude at the installation site is not greater than 10,000 feet.
- Cooling mechanisms, such as fans and blowers in the switch, can draw dust and other particles causing contaminant buildup inside the chassis, which can result in system malfunction. You must install this

equipment in an environment as free from dust and foreign conductive material (such as metal flakes from construction activities) as is possible.

Shipping Box Contents

The shipping box contains the model of the switch you ordered and other components needed for installation. Some components are optional, depending on your order.

Note Verify that you have received these items. If any item is missing or damaged, contact your Cisco representative or reseller for instructions. Verify that you have received these items. If any item is missing or damaged, contact your Cisco representative or reseller for instructions.

Figure 11: Components delivered in the shipping box

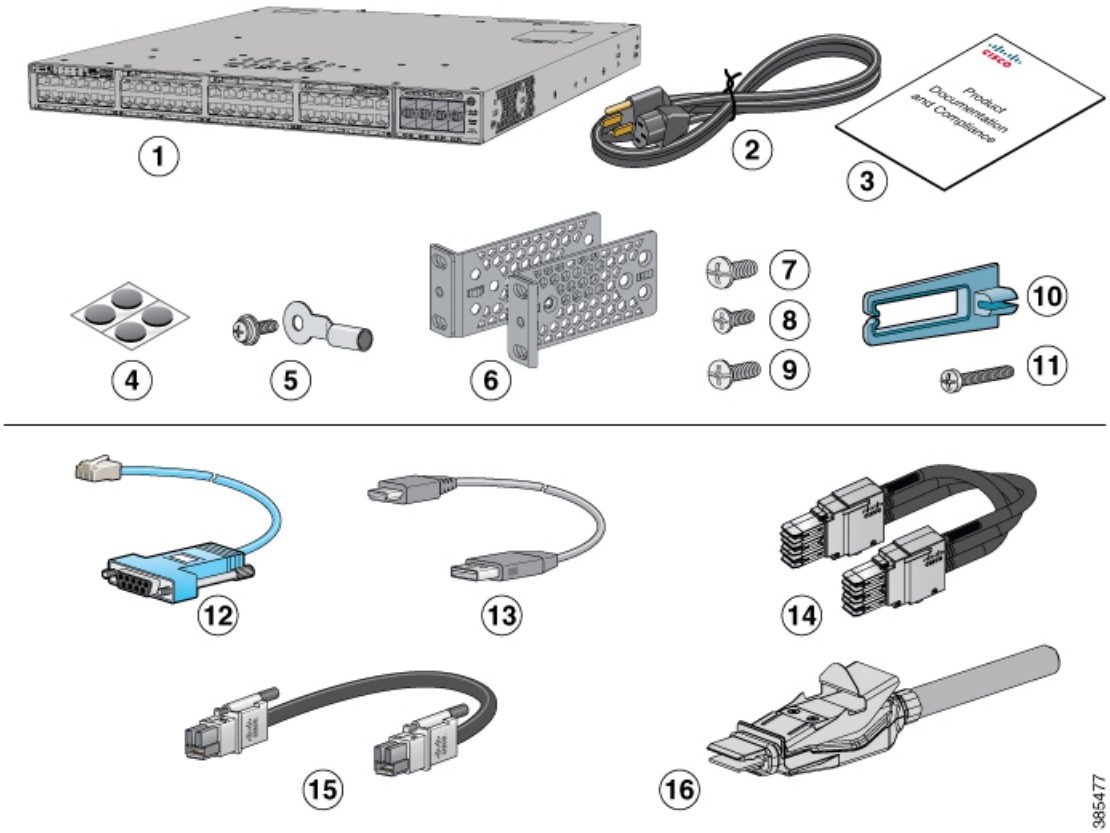

1	Cisco Catalyst 9300 Series switch with optional network module[1] (power supply and fan modules not shown)	9	Eight number-8 Phillips flat-head screws
2	AC power cord	10	Cable guide

3	Product documentation and compliance document	11	M4.0 x 20mm Phillips pan-head screw
4	Four rubber mounting feet	12	(Optional) RJ-45 console cable[1]
5	Ground lug screw and ring terminal	13	(Optional) USB console cable[1]
6	Two 19-inch mounting brackets	14	(Optional) StackWise-480 cable (0.5-meter, 1-meter, or 3-meter)[1]
7	Four number-12 pan-head screws	15	(Optional) StackPower cable (0.3-meter or 1.5-meter)[1]
8	Four number-10 pan-head screws	16	(Optional) StackWise-320 cable

Note

1. The item is orderable.

Tools and Equipment

Obtain these necessary tools:

- A Number-2 Phillips screwdriver.

Verifying Switch Operation

Before you install the switch in a rack, on a wall, or on a table or shelf, power on the switch and verify that it passes POST.

To power on the switch, plug one end of the AC power cord into the switch AC power connector, and plug the other end into an AC power outlet.

As the switch powers on, it begins the POST, a series of tests that runs automatically to ensure that the switch functions properly. LEDs can blink during the test. The SYST LED blinks green, and the other LEDs remain solid green.

When the switch completes POST successfully, the SYST LED remains green. The other LEDs turn off and then reflect the switch operating status. If a switch fails POST, the SYST LED turns amber.

POST failures are usually fatal. Call Cisco technical support representative if your switch fails POST.

After a successful POST, unplug the power cord from the switch and install the switch in a rack, on a wall, on a table, or on a shelf.

Warning

Attach only the following Cisco external power system to the switch: Cisco XPS 2200 Statement 387

Planning a Switch Data Stack

Cisco Catalyst 9300 switches can share bandwidth by using data stacking.

Switch Stacking and Power Stacking Guidelines

Before connecting the switches in a stack, keep in mind these stacking guidelines:

- Size of the switch and any optional power-supply module. The 1100-W power-supply module is longer than the other modules. Stacking switches with the same power-supply modules together makes it easier to cable the switches.
- Length of cable. Depending on the configurations that you have, you might need different-sized cables. If you do not specify the length of the StackWise cable, the 0.5-meter cable is supplied. If you need the 1-meter cable or the 3-meter cable, you can order it from your Cisco supplier. For cable part numbers, see StackWise Accessories, on page 115. The Data Stack Cabling Configurations, on page 30 provides examples of recommended configurations.
- For rack-mounted switch stacks that are members of a StackPower stack as well as a data stack, see Planning a StackPower Stack, on page 33.
- You can create data stacks with up to eight switches in a stack.

Data Stack Cabling Configurations

This is an example of a recommended configuration that uses the supplied 0.5-meter StackWise cable. In this example, the switches are stacked in a vertical rack or on a table. This configuration provides redundant connections. The configuration example uses the supplied 0.5-meter StackWise cable. The example shows the full-ring configuration that provides redundant connections.

Figure 12: Data Stacking the Switches in a Rack or on a Table Using the 0.5-meter StackWise Cables

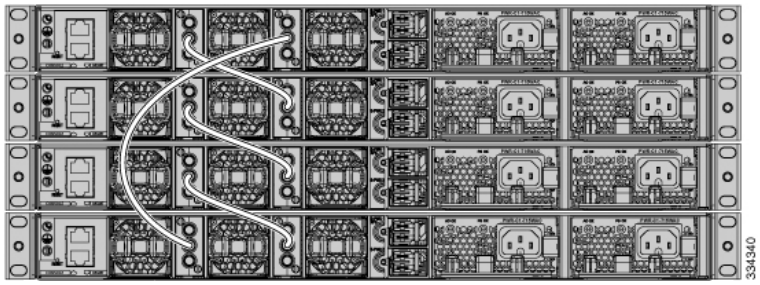

This example shows a recommended configuration when the switches are mounted side-by-side. Use the 1-meter and the 3-meter StackWise cables to connect the switches. This configuration provides redundant connections.

Figure 13: Data Stacking in a Side-by-Side Mounting

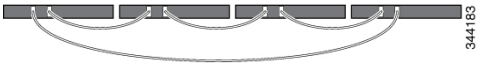

Data Stack Bandwidth and Partitioning Examples

This section provides examples of data stack bandwidth and possible data stack partitioning. The figure shows a data stack of switches that provides full bandwidth and redundant StackWise cable connections.

Figure 14: Example of a Data Stack with Full Bandwidth Connections

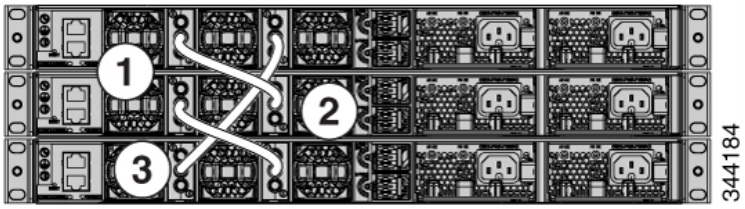

This figure shows an example of a stack of switches with incomplete StackWise cabling connections. This stack provides only half bandwidth and does not have redundant connections.

Figure 15: Example of a Data Stack with Half Bandwidth Connections

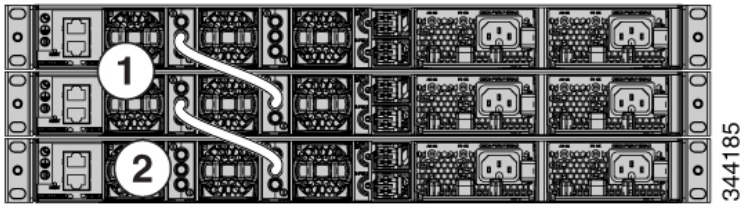

The figures below show data stacks of switches with failover conditions. In this figure, the StackWise cable is bad in link 2. Therefore, this stack provides only half bandwidth and does not have redundant connections.

Figure 16: Example of a Data Stack with a Failover Condition

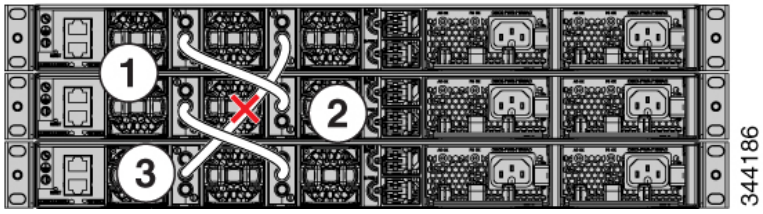

In this figure, link 2 is bad. Therefore, this stack partitions into two stacks, and the top and bottom switches become the active switch in the stack. If the bottom switch is a member (not active or standby switch), it reloads.

Figure 17: Example of a Partitioned Data Stack with a Failover Condition

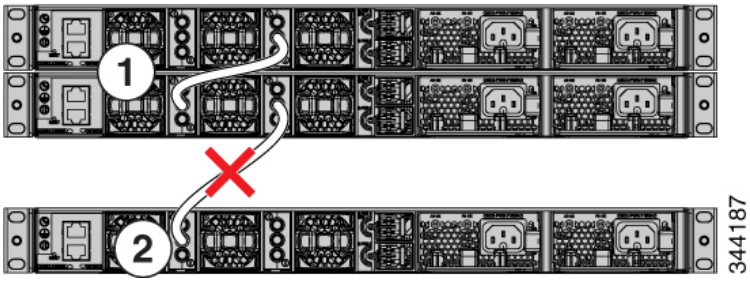

Power-On Sequence for Switch Stacks

Consider these guidelines before you power on the switches in a stack:

- The sequence in which the switches are first powered on might affect the switch that becomes the stack master.
- There are two ways to elect an active switch:
  - If you want a particular switch to become the active switch, configure it with the highest priority. Among switches with same priority, the switch with the lowest MAC address becomes the active switch.
  - If you want a particular switch to become the active switch, power on that switch first. This switch remains the active switch until a reelection is required. After 2 minutes, power on the other switches in the stack. If you have no preference as to which switch becomes the active switch, power on all the switches in the stack within 1 minute. These switches participate in the active switch election. Switches powered on after 2 minutes do not participate in the election.

If changes are made to the stack without powering down the switches, the following results can occur:

- If two operating partial ring stacks are connected together using a stack cable, a stack merge can take place. This situation reloads the whole stack (all switches in the stack).
- If some switches in the stack are completely separated from the stack, a stack split can occur.
- A stack split can occur on a full ring stack if:
  - More than one running switch is removed without powering down.
  - More than one stack cable is removed without powering down.
- A stack split can occur in a partial ring stack if:
  - A switch is removed without powering down.
  - A stack cable is removed without powering down.
- In a split stack, depending on where the active and standby switches are located, either two stacks might be formed (with the standby taking over as the new active switch in the newly formed stack) or all the members in the newly formed stack might reload.

Note These results depend on how the switches are connected. You can remove two or more switches from the stack without splitting the stack.

For conditions that can cause a stack reelection or to manually elect the active switch, see the stacking software configuration guide on Cisco.com at this URL: http://www.cisco.com/go/c9300.

Planning a StackPower Stack

StackPower Stacking Guidelines

You can configure a StackPower stack for either power sharing or redundancy. In power-sharing mode, the power of all the power supplies in the stack is aggregated and distributed among the stack members.

In redundant mode, when the total power budget of the stack is calculated, the wattage of the largest power supply is not included. That power is held in reserve and used to maintain power to switches and attached devices when one power supply fails. Following the failure of a power supply, the StackPower mode becomes power sharing.

Note Power-sharing mode is the recommended configuration for Cisco Catalyst 9300 Series Switches.

For general concepts and management procedures for switch power stacks, see the Software Configuration Guide on Cisco.com.

Before connecting the switches in a power stack, keep in mind these guidelines:

- A switch power stack can include a maximum of four switches in a ring topology and eight switches in a star topology.
- Size of the switch and any optional power supply module. The 1100-W power-supply module is 1.5 inches (3.81 cm) longer than the other modules, and with the attached cable retention clip, it extends 3 inches (7.62 cm) from the switch chassis. Stacking switches with the same power-supply modules together makes it easier to cable the switches. For switch dimensions, see Appendix A, “Technical Specifications.”
- Length of cable. Depending on the configurations that you have, you might need different-sized cables. If you do not specify the length of the StackPower cable, the 0.3 meter cable is supplied. If you need the 1.5 meter cable, you can order it from your Cisco supplier. For cable part numbers, see StackPower Connector, on page 23. The StackPower Cabling Configurations, on page 33 provides examples of recommended configurations.
- For rack-mounted switch stacks that are members of a data stack and a StackPower stack, see Switch Stacking and Power Stacking Guidelines, on page 30

StackPower Cabling Configurations

This section describes the recommended cabling configurations for a StackPower stack. There are two types of StackPower cables.

The cable in the figure connects a switch to another switch in a power stack or with an XPS. StackPower cables have color bands on the cable ends:

- The cable end with the green band can connect only to a switch.
- The cable end with the yellow band can connect to a switch or an XPS.

The cable is available in two lengths.

Part Number	Cable Type	Length
CAB-SPWR-30CM	StackPower Cable	0.3 meter
CAB-SPWR-150CM	StackPower Cable	1.5 meter

Figure 18: StackPower Cable for Use with Cisco Catalyst 9300 Series Switches

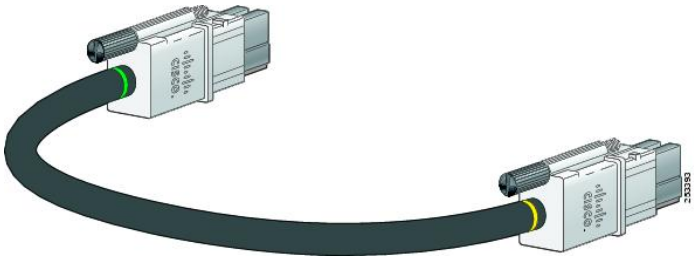

This figure shows a ring configuration using both of the supplied 0.3-meter StackPower cables and one 1.5-meter cable. In the examples that follow, the switches are stacked in a vertical rack or on a table.

Figure 19: StackPower Ring Topology

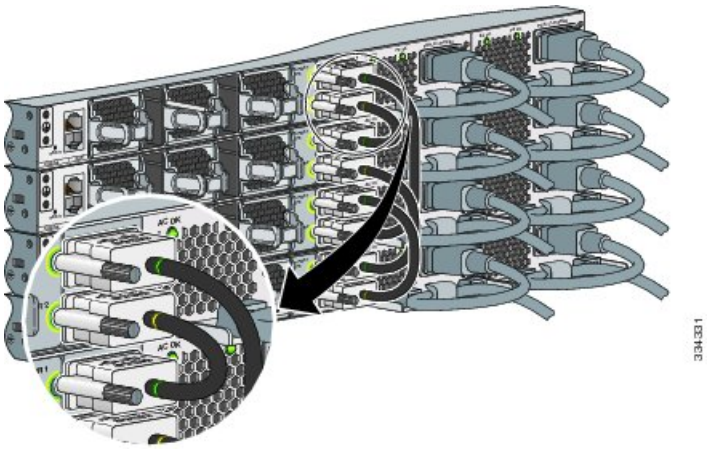

This figure shows 8 switches connected in a star topology.

Figure 20: StackPower Star Topology

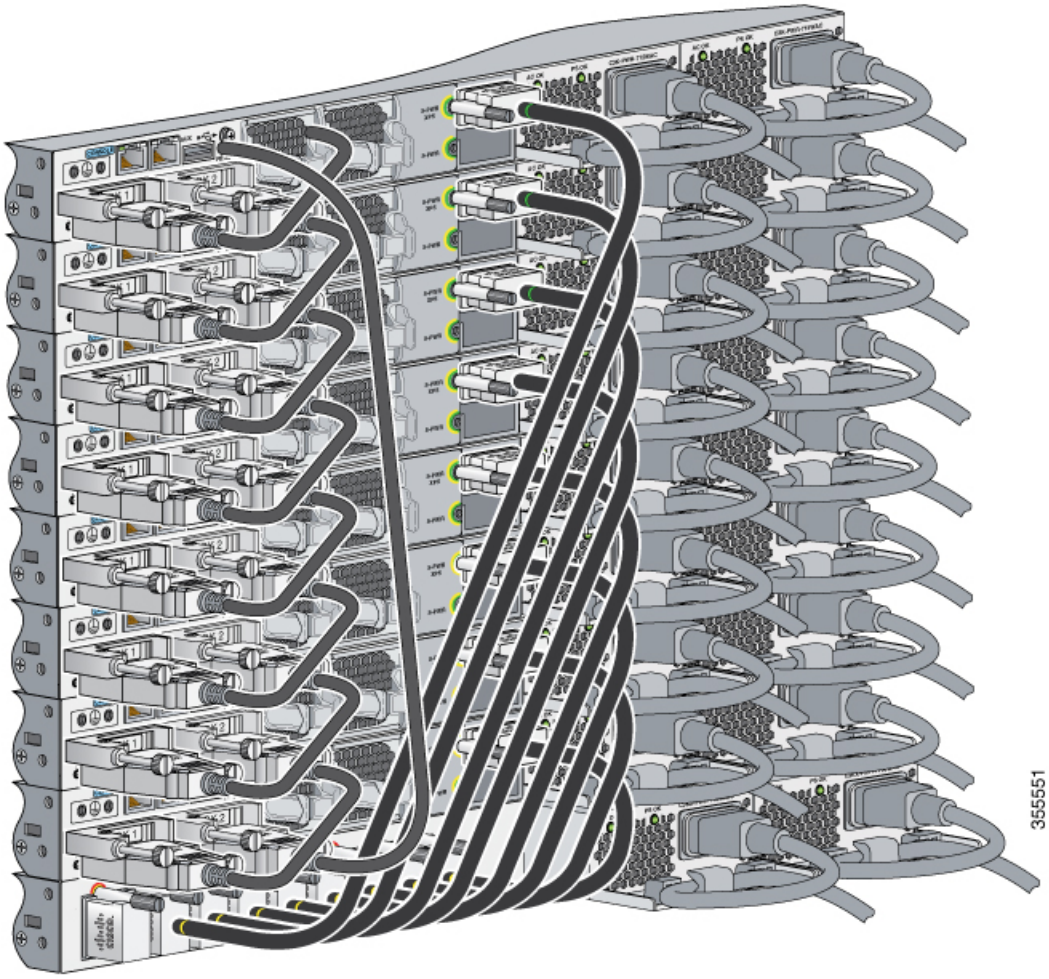

StackPower Partitioning Examples

These figures show StackPower stacks of switches with failover conditions.

In the following figure, the StackPower cable 2 is faulty. Therefore, this stack does not provide redundancy.

Figure 21: Example of a StackPower Stack with a Failover Condition

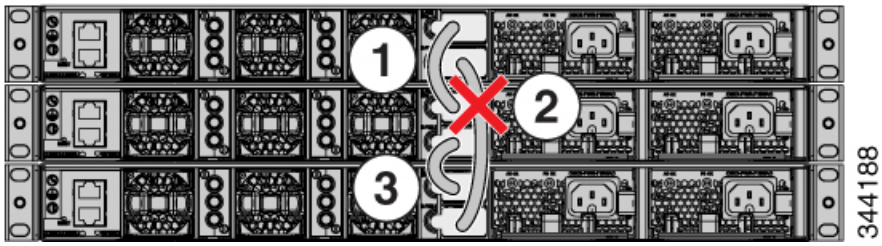

In the following figure, StackPower port B on the center switch has failed and this stack partitions into two stacks. The top two switches share power, and the bottom switch is now a separate stack.

Figure 22: Example of a Partitioned StackPower Stack with a Failover Condition

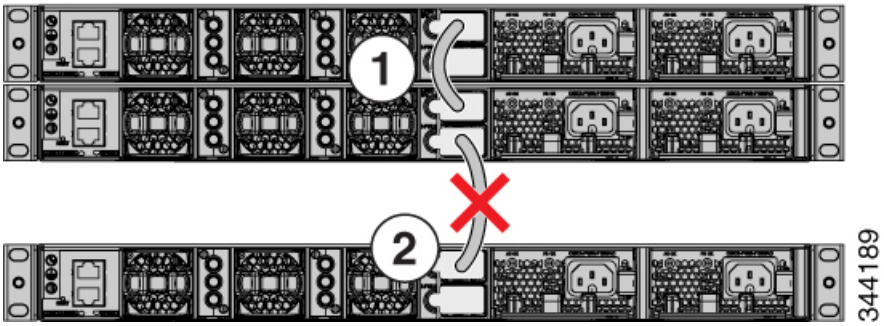

Installing the Switch

Rack-Mounting

Installation in racks other than 19-inch racks requires a bracket kit not included with the switch.

Warning To prevent bodily injury when mounting or servicing this unit in a rack, you must take special precautions to ensure that the system remains stable. The following guidelines are provided to ensure your safety:

- This unit should be mounted at the bottom of the rack if it is the only unit in the rack.
- When mounting this unit in a partially filled rack, load the rack from the bottom to the top with the heaviest component at the bottom of the rack.
- If the rack is provided with stabilizing devices, install the stabilizers before mounting or servicing the unit in the rack.

Statement 1006

The following figure shows the standard 19-inch brackets and other optional mounting brackets. You can order the optional brackets from your Cisco sales representative.

Figure 23: Rack-Mounting Brackets

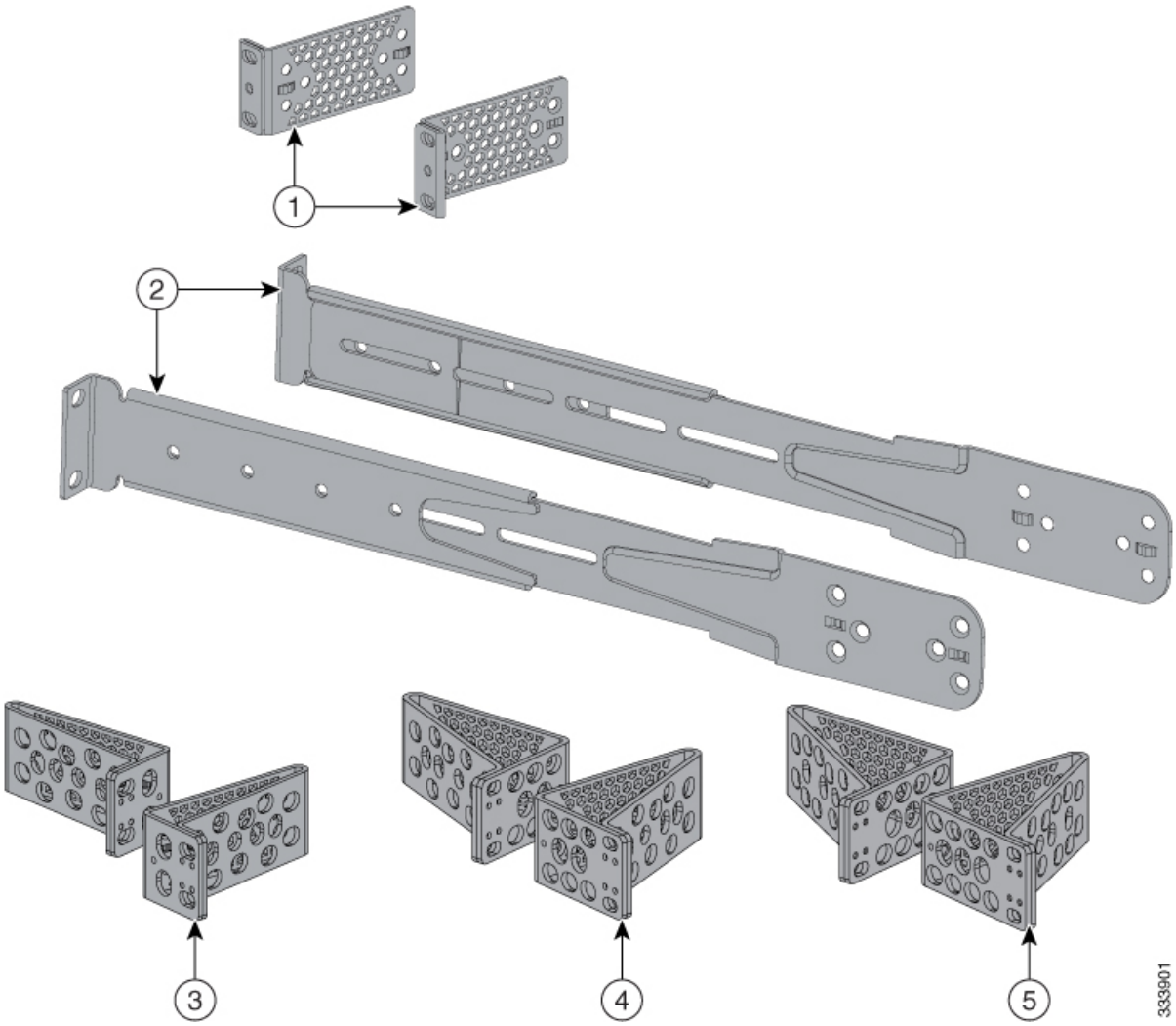

1	19-inch brackets (ACC-KIT-T1=)	4	23-inch brackets (RACK-KIT-T1=)
2	Extension rails and 5 brackets for four-point mounting, includes 19-inch brackets (4PT-KIT-T2=)	5	24-inch brackets (RACK-KIT-T1=)
3	ETSI brackets (RACK-KIT-T1=)	-	-

Attaching the Rack-Mount Brackets

Before you begin

You can use the minimum recommended number of two screws for installing the rack-mount bracket to each side of the switch. If required, while mounting, you can use the additional four screws provided in the accessory kit.

Procedure

Step 1 Use two Phillips flat-head screws to attach the long side of the bracket to each side of the switch for the front- or rear-mounting positions.

Figure 24: Attaching 19-inches Rack Mount Brackets and Extension Rails

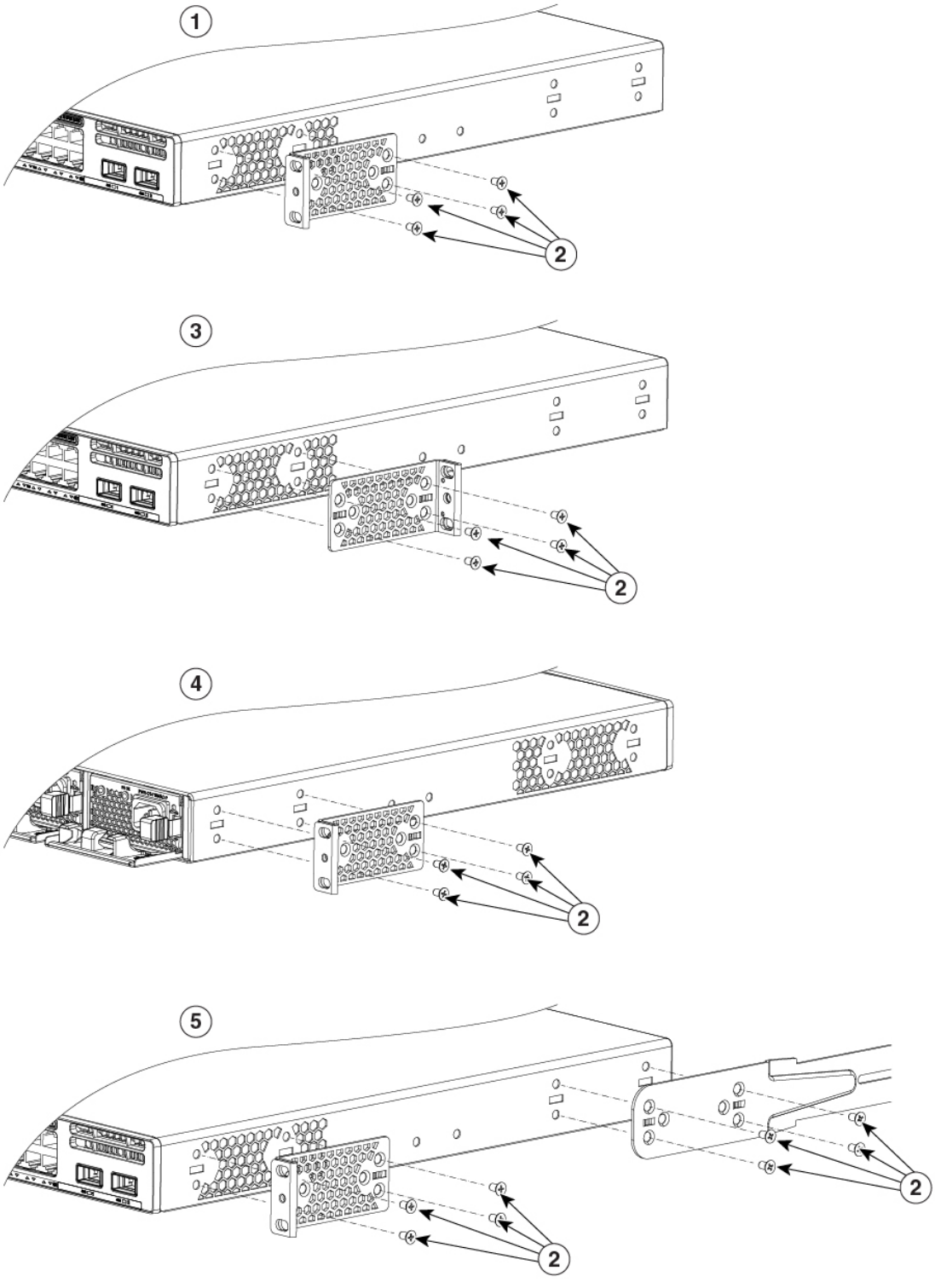

1	Front-mounting position	4	Rear-mounting position

2	Number-8 Phillips flat-head screws	5	Four-point mounting positions
3	Mid-mounting position	-	-

Step 2 For Network Equipment-Building Standards (NEBS) compliant installations, perform the following steps:

a) Stick the labels available with CAT-A-AIRFLOW kit on to each side of the switch as shown in the following illustration. Make sure you align the holes in the labels with the screw holes in the chassis.

b) Secure the brackets to the chassis using the flat head screws provided with the bracket.

Note NEBS is supported only with four-point mounting.

To comply with NEBS, GR-63, the switch airflow direction must be from the front (cold) to the rear (hot). Attaching the air vent labels in the CAT-A-AIRFLOW kit ensures proper airflow by preventing the intake of hot air into the chassis through the side vents, which could otherwise result in overheating of the chassis.

Figure 25: Attaching the NEBS-Compliant Air Vent Label to the Switch

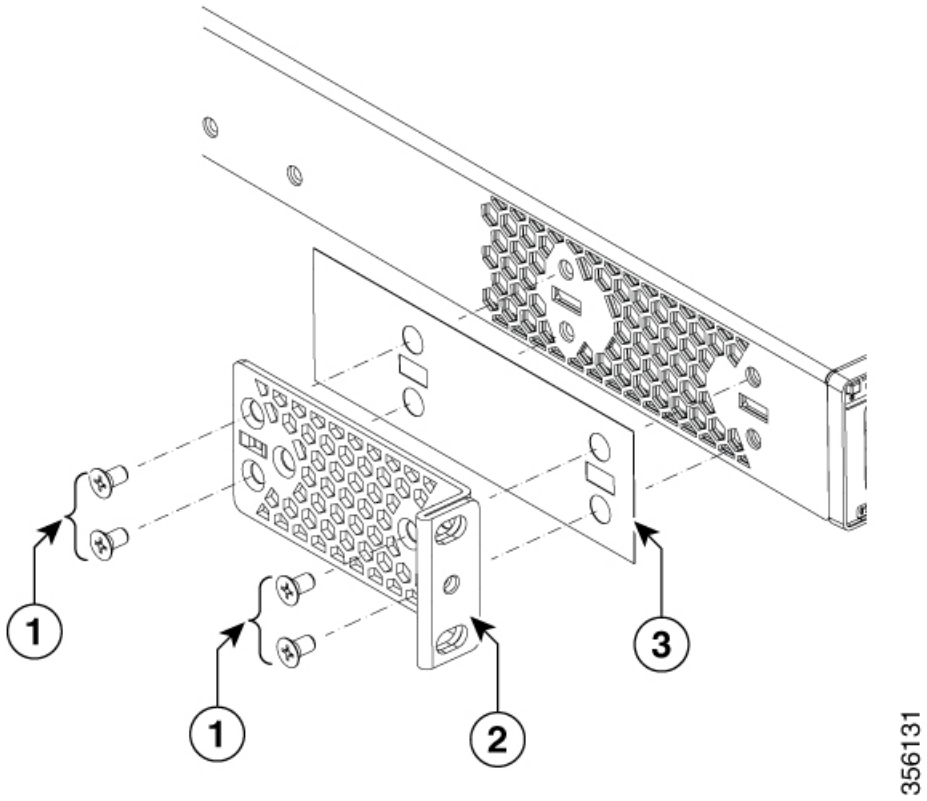

1	Number-8 Phillips flat-head screws	3	NEBS-compliant CAT-A-AIRFLOW kit
2	19-inch bracket	-	-

Mounting the Switch in a Rack

Procedure

Step 1 Use the four supplied Phillips machine screws to attach the brackets to the rack.

Step 2 Use the black Phillips machine screw to attach the cable guide to the left or right bracket.

Figure 26: Mounting the Switch in a Rack

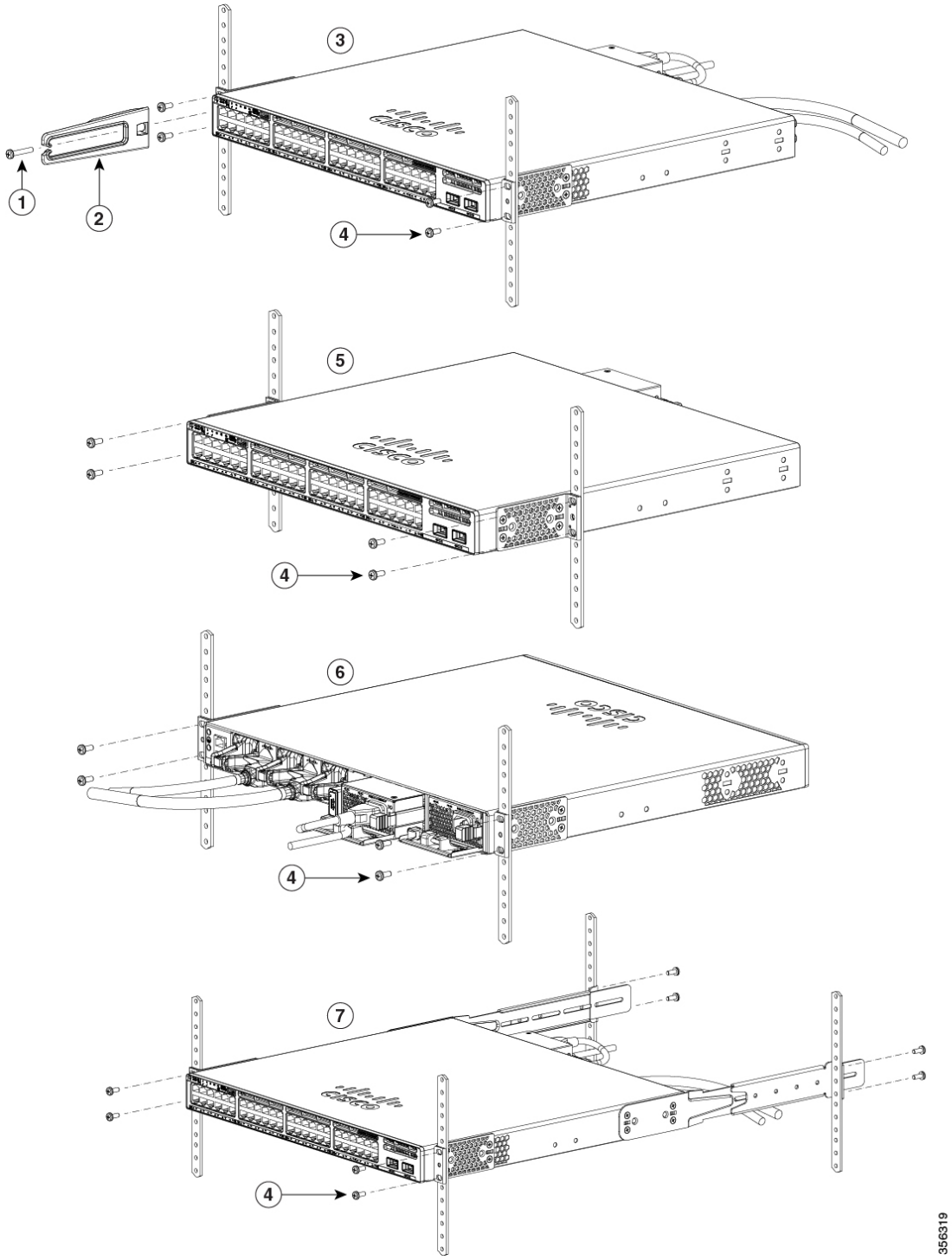

1	Phillips machine screw, black	5	Mid-mounting position
2	Cable guide	6	Rear-mounting position

3	Front-mounting position	7	Four-point mounting position
4	Number-12 or number-10 Phillips machine screws	-	-

Installing the Switch on a Table or Shelf

Procedure

Step 1 To install the switch on a table or shelf, locate the adhesive strip with the rubber feet in the mounting-kit envelope.

Step 2 Attach the four rubber feet to the four circular etches on the bottom of the chassis.

Step 3 Place the switch on the table or shelf near an AC power source.

Step 4 When you complete the switch installation, see After Switch Installation, on page 43for information on switch configuration.

After Switch Installation

- Configure the switch. For more information, see "Setting up the Switch" topic.
- Connect to the stack ports.
- Install the power cord retainer (optional).
- Connect to the front-panel ports.

Connecting the StackWise Cables

Before connecting the StackWise cables, review the Planning a Switch Data Stack, on page 30. Always use a Cisco-approved StackWise cable to connect the switches.

Connecting a StackWise-320 Cable

Procedure

Step 1 Remove the dust covers from the StackWise cables and store them for future use.

A StackWise adapter must be installed in the StackWise port to enable stacking. In a default setup, the StackWise adapter blanks are installed in the StackWise ports. If StackWise is ordered with the switch, StackWise adapters are already installed in the StackWise ports, and you can proceed to step 4.

Step 2 Remove the StackWise adapter blanks from each destination StackWise port using the Torx T15 Allen key provided in the stacking kit (or a Torx T15 screwdriver). Store them for future use.

Step 3 Install the StackWise adapter in each destination StackWise port, and secure it in place using the supplied Torx T15 key, or a Torx T15 screwdriver.

Figure 27: Inserting the StackWise-320 Adapter

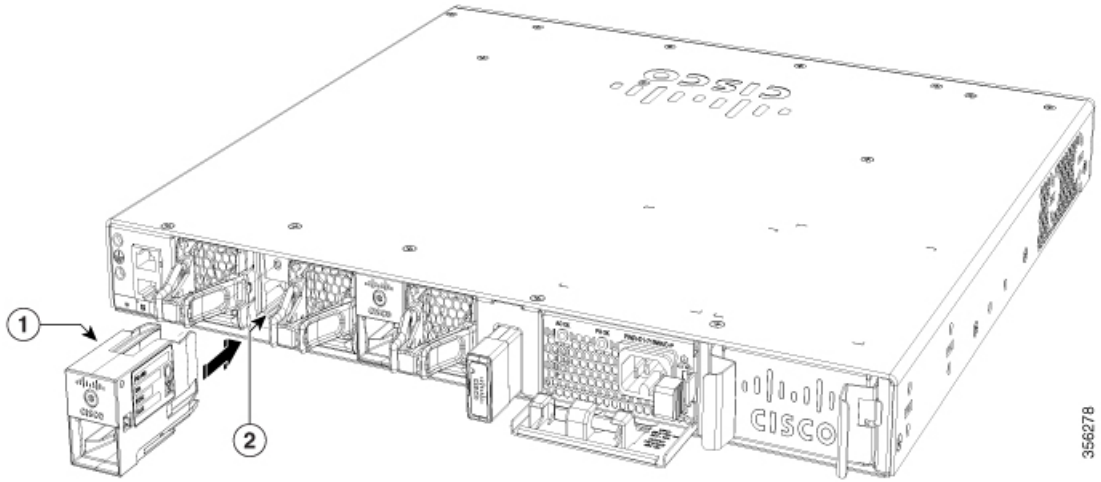

1	StackWise-320 adapter	2	StackWise port

Step 4 Align and insert the StackWise cable connector into the StackWise adapter in the StackWise port. Push inwards until the spring latch locks into the slot.

Figure 28: Installing the StackWise-320 Cable in a StackWise Port

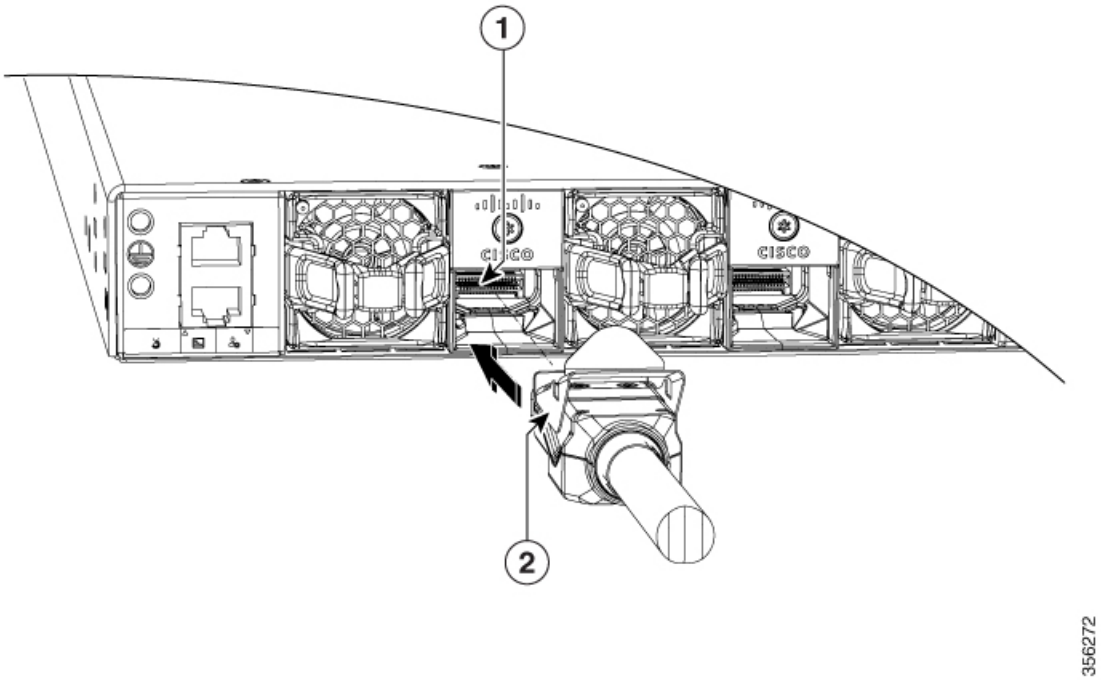

1	StackWise-320 adapter	2	Stacking cable

To remove a StackWise-320 adapter from the connector, make sure you press down the spring latch to unlock it from the slot.

Removing and installing the StackWise cable can shorten its useful life. Do not remove and insert the cable more often than is absolutely necessary (installing and removing it up to 200 times is supported).

Step 5 Connect the other end of the cable to the StackWise port on the other switch.

Connecting a StackWise-480 Cable

Procedure

Step 1 Remove the dust covers from the StackWise cables and store them for future use.

Step 2 Connect the cable to the StackWise port on the switch rear panel. Align the connector and connect the StackWise cable to the StackWise port on the switch rear panel and finger-tighten the screws (clockwise direction). Make sure the Cisco logo is on the top side of the connector as shown in the figure.

Figure 29: Connecting the StackWise-480 Cable in a StackWise Port

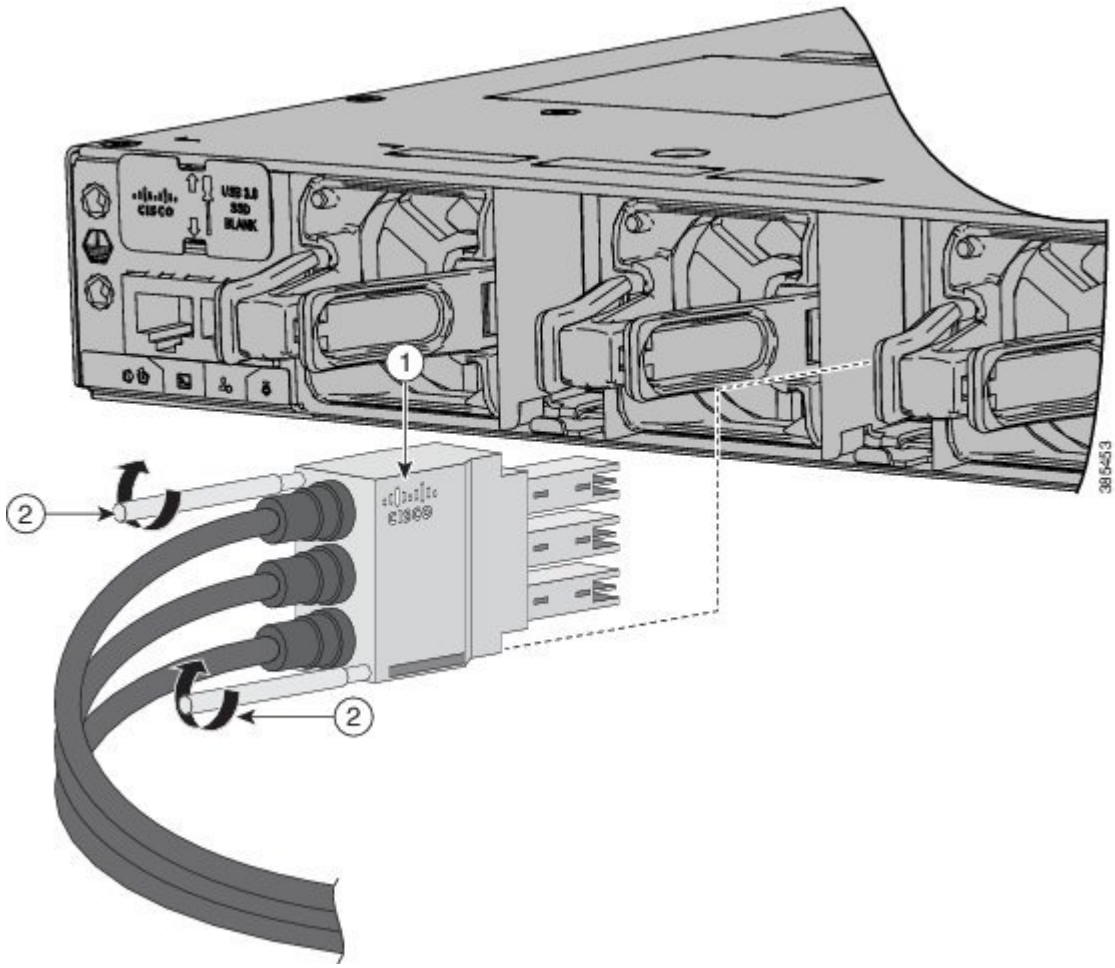

1	Cisco logo	2	Connector screws

Step 3 Connect the other end of the cable to the port on the other switch and finger-tighten the screws. Avoid overtightening the screws.

To remove the StackWise-480 cable from the connector, make sure you fully unscrew the correct screws. When the connectors are not being used, replace the dust covers.

Caution Removing and installing the StackWise cable can shorten its useful life. Do not remove and insert the cable more often than is absolutely necessary (installing and removing it up to 200 times is supported).

Connecting to the StackPower Ports

Before you begin

Before connecting the StackPower cables, review Planning a Switch Data Stack, on page 30. Always use a Cisco-approved StackPower cable to connect the switches. To prevent misconfiguration, the StackPower ports on the switch are keyed and have colored bands that match the keying and bands on the StackPower cable connectors.

Procedure

Step 1 Remove the dust covers from the StackPower cable connectors.

Step 2 Connect the end of the cable with a green band to either StackPower port on the first switch. Align the connector correctly, and insert it into a StackPower port on the switch rear panel.

Step 3 Connect the end of the cable with the yellow band to another switch (to configure StackPower power sharing).

Step 4 Hand-tighten the captive screws to secure the StackPower cable connectors in place.

Caution Removing and installing the StackPower cable can shorten its useful life. Do not remove and insert the cable more often than is absolutely necessary.

Installing a Network Module in the Switch

For information on network modules, see:

- Installing a Network Module, on page 52

Installing and Removing Cisco Pluggable Transceiver Modules

See these sections for information on Cisco pluggable transceiver modules (SFP, SFP, SFP28 and QSFP+ modules):

- Installing a Cisco Pluggable Transceiver Module, on page 60
- Removing Cisco Pluggable Transceiver Modules, on page 62
- Cisco 40-Gigabit QSFP+ Transceiver Modules Installation Note

Connecting Devices to the Ethernet Ports

- 10/100/1000/Multigigabit Ethernet Port Connections, on page 48
- PoE+ and Cisco UPOE/UPOE+ Port Connections, on page 48

10/100/1000/Multigigabit Ethernet Port Connections

The switch 10/100/1000 and Multigigabit Ethernet port configuration changes to operate at the speed of the attached device. If the attached ports do not support autonegotiation, you can manually set the speed and duplex parameters. Connecting devices that do not autonegotiate or that have the speed and duplex parameters manually set can reduce performance or result in no linkage.

To maximize performance, choose one of these methods for configuring the Ethernet ports:

- Let the ports autonegotiate both speed and duplex.
- Set the interface speed and duplex parameters on both ends of the connection.

Auto-MDIX Connections

The autonegotiation and the auto-MDIX features are enabled by default on the switch.

With autonegotiation, the switch port configurations change to operate at the speed of the attached device. If the attached device does not support autonegotiation, you can manually set the switch interface speed and duplex parameters.

With auto-MDIX, the switch detects the required cable type for copper Ethernet connections and configures the interface accordingly.

If auto-MDIX is disabled, use the guidelines in this table to select the correct cable.

Table 17: Recommended Ethernet Cables (When Auto-MDIX is Disabled)

Device	Crossover Cable	Straight-Through Cable
Switch to switch	Yes	No
Switch to hub	Yes	No
Switch to computer or server	No	Yes
Switch to router	No	Yes
Switch to IP phone	No	Yes

[4] 100BASE-TX and 1000BASE-T traffic requires twisted four-pair, Category 5 or higher. 10BASE-T traffic can use Category 3 cable or higher.

PoE+ and Cisco UPOE/UPOE+ Port Connections

The 10/100/1000/Multigigabit Ethernet PoE+ and Cisco UPOE/UPOE+ ports have the same autonegotiation settings and cabling requirements that are described in the 10/100/1000/Multigigabit Ethernet Port Connections, on page 48. These ports can provide PoE, PoE+, or Cisco UPOE/UPOE+ inline power.

PoE inline power supports devices compliant with the IEEE 802.3af standard, as well as prestandard Cisco IP Phones and Cisco Aironet Access Points. Each port can deliver up to 15.4 W of PoE. PoE+ inline power supports devices compliant with the IEEE 802.3at standard, by delivering up to 30 W of PoE+ power per port to all switch ports.

Cisco UPOE+/UPOE uses the same cabling standard as PoE. However, instead of transmitting power over two of the twisted pairs, it provides the capability to source up to 90 W of power by using all four twisted pairs of standard Ethernet cabling (Category 5e or higher). To achieve this, it uses two Power Sourcing Equipment (PSE) controllers to power both the signal pairs and the spare pairs. Cisco UPOE+ guarantees 71.3 W of power to a class 8 Powered Device (PD). The following figure shows the architectural difference between PoE/PoE+ and Cisco UPOE/UPOE+.

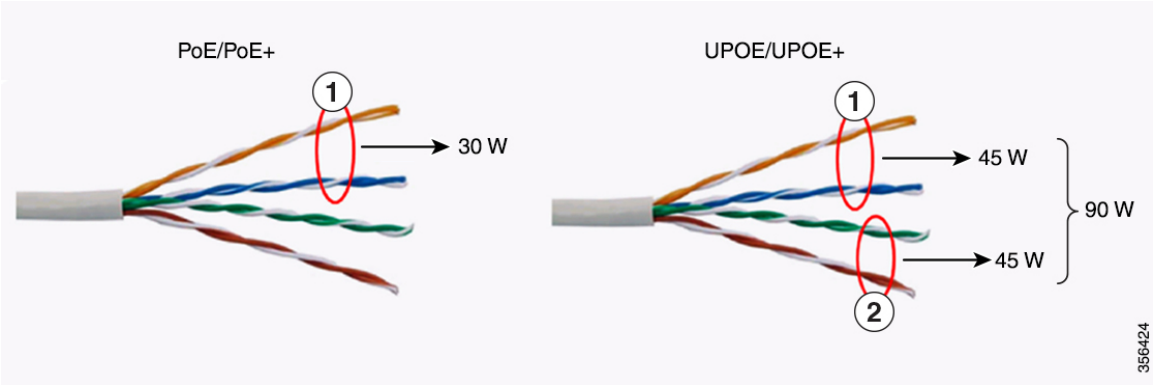

Table 18: PoE/PoE+ and Cisco UPOE/UPOE+ Differences

1	Signal pair	2	Spare pair

See Power Supply Modules, on page 20 for the power supply modules required to support PoE, PoE+, and Cisco UPOE/UPOE+ on 24- and 48-port switches.

Warning Voltages that present a shock hazard may exist on Power over Ethernet (PoE) circuits if interconnections are made using uninsulated exposed metal contacts, conductors, or terminals. Avoid using such interconnection methods, unless the exposed metal parts are located within a restricted access location and users and service people who are authorized within the restricted access location are made aware of the hazard. A restricted access area can be accessed only through the use of a special tool, lock and key or other means of security. Statement 1072

Warning Voice over IP (VoIP) service and the emergency calling service do not function if power fails or is disrupted. After power is restored, you might have to reset or reconfigure equipment to regain access to VoIP and the emergency calling service. In the USA, this emergency number is 911. You need to be aware of the emergency number in your country. Statement 371

Caution Ethernet twisted pair cables can store high levels of static electricity. Always ground the cables to a suitable and safe earth ground before connecting them to the switch or other devices.

Caution Noncompliant cabling or powered devices can cause a PoE port fault. Use only standard-compliant cabling to connect Cisco prestandard IP Phones and wireless access points, IEEE 802.3af, or 802.3at (PoE+)-compliant devices. You must remove any cable or device that causes a PoE fault.

CHAPTER 3

Installing a Network Module

- Network Modules Overview, on page 51
- Installing a Network Module in the Switch, on page 52
- Removing a Network Module, on page 59
- Installing and Removing Cisco Transceiver Modules, on page 60
- Finding the Network Module Serial Number, on page 62

Network Modules Overview

The Cisco Catalyst 9300 Series Switches supports the following optional network modules for uplink ports.

Network Module	Description
C9300-NM-4G	This module has four 1G SFP module slots. Any combination of standard SFP modules are supported. **Note** Supported only on Cisco Catalyst 9300 Series Switches.
C9300-NM-8X	This module has eight 10G SFP+ module slots. **Note** Supported only on Cisco Catalyst 9300 Series Switches.
C9300-NM-2Q	This module has two 40G QSFP+ module slots. **Note** Supported only on Cisco Catalyst 9300 Series Switches.
C9300-NM-4M	This module has four Multigigabit Ethernet (mGig) module slots. **Note** Supported only on Cisco Catalyst 9300 Series Switches.
C9300-NM-2Y	This module has two 25G SFP28 module slots. **Note** Supported only on Cisco Catalyst 9300 Series Switches.
C3850-NM-4-1G	This module has four 1G SFP module slots. Any combination of standard SFP modules are supported. SFP+ modules are not supported. If you insert an SFP+ module in the 1G network module, the SFP+ module does not operate, and the switch logs an error message.

Network Module	Description
C3850-NM-2-10G	This module has four slots. Two slots (left side) support only 1G SFP modules and two slots (right side) support either 1G SFP or 10G SFP modules.
C3850-NM-4-10G	This module has four 10G slots or four 1G slots.
C3850-NM-8-10G	This module has eight 10G slots with an SFP+ port in each slot. Each port supports a 1G or 10G connection
C3850-NM-2-40G	This module has two 40G slots with a QSFP+ connector in each slot.
Blank Network Module	Insert this blank module when the switch has no uplink ports (this is required for sufficient air flow).

Installing a Network Module in the Switch

Safety Warnings

This section includes the installation cautions and warnings. Translations of the safety warnings are available in the *Regulatory Compliance and Safety Information for Cisco Catalyst 9300 Series Switches*.

Read this section before you install a network module.

Caution Proper ESD protection is required whenever you handle equipment. Installation and maintenance personnel should be properly grounded by grounding straps to eliminate the risk of ESD damage to the equipment. Equipment is subject to ESD damage whenever you remove it.

Warning Only trained and qualified personnel should be allowed to install, replace, or service this equipment. Statement 1030

Warning Do not reach into a vacant slot or chassis while you install or remove a module. Exposed circuitry could constitute an energy hazard. Statement 206

Installing a Network Module

Note The switch can operate without a network module, but a blank module (with no ports or SFP slots) is available and should be installed when uplink ports are not required.

Note The switch generates logs when you insert or remove a network module with SFP/SFP+/SFP28/QSFP+ slots.

Use only supported network modules and Cisco pluggable transceivers. Each module has an internal serial EEPROM that is encoded with security information.

The network module is hot-swappable. If you remove a module, replace it with another network module or a blank module.

Note The switch complies with EMC, safety, and thermal specifications when a network module is present. If no uplink ports are required, install a blank network module.

Before you begin

When installing network modules, observe these precautions:

- Do not remove the blank module from the slot unless you are installing a network module. A module must be in the uplink slot at all times.
- Do not remove the dust plugs from the pluggable transceivers or the rubber caps from the fiber-optic cable until you connect the cable. The plugs and caps protect the module ports and cables from contamination and ambient light.
- Removing and installing a network module can shorten its useful life. Do not remove and insert a network module more often than is necessary.
- To prevent ESD damage, follow your normal board and component handling procedures when connecting cables to the switch and other devices.

Note Unlike other network modules, the C9300-NM-8X cannot be fully inserted and secured until the jackscrew is properly tightened.

1. Push the module into the uplink slot until the jackscrew connects with the rightmost tab.
2. You will feel some light resistance, because a spring-loaded tab inside the slot will push back against the C9300-NM-8X module
3. Continue to tighten the jackscrew while gently pushing the front panel of the network module into the slot.

Procedure

Step 1 Attach an ESD-preventive wrist strap to your wrist and to an earth ground surface.

Step 2 Remove the module from the protective packaging.

Step 3 Remove the blank module from the switch and save it. To remove the blank module, loosen the captive screw on the module using a screwdriver until it completely disengages from the chassis.

Caution Verify the correct orientation of your module before installing it. Incorrect installation can damage the module.

Caution Do not install the network module with connected cables or installed pluggable transceivers. Always remove any cables and transceiver modules before you install the network module.

Caution A module interface might become error-disabled when a network module with connected fiber-optic cables is installed or removed. If an interface is error-disabled, you can reenable the interface by using the **shutdown** and **no shutdown** interface configuration commands.

Step 4 Position the module face up to install it in the module slot. Slide the module into the slot until the screw makes contact with the chassis. Fasten the captive screws to secure the network module in place.

Figure 30: Installing the Network Module in the Switch

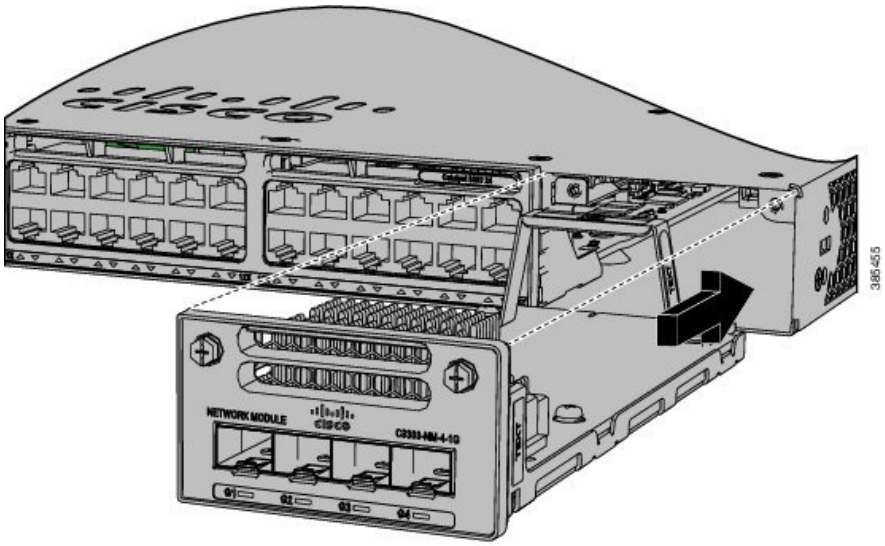

Network Module Port Configurations

C9300-NM-2Q Module

If you use a 40G QSFP module, the ports default to 40G interfaces. In this case, the 10G interfaces are displayed but not used.

Table 19: C9300-NM-2Q Module with 40G QSFP Module

Interface	Action
FortyGigabitEthernet1/1/1	Configure this interface
FortyGigabitEthernet1/1/2	Configure this interface
TenGigabitEthernet1/1/1	Disregard

Interface	Action
TenGigabitEthernet1/1/2	Disregard
TenGigabitEthernet1/1/3	Disregard
TenGigabitEthernet1/1/4	Disregard
TenGigabitEthernet1/1/5	Disregard
TenGigabitEthernet1/1/6	Disregard
TenGigabitEthernet1/1/7	Disregard
TenGigabitEthernet1/1/8	Disregard

C9300-NM-4G Module

All ports in the C9300-NM-4G module are natively GigabitEthernet and are configured GigabitEthernet1/1/1 though GigabitEthernet1/1/4. There are only four interfaces that are valid, and the other four should not be used even though they are available in the CLI.

Table 20: C9300-NM-4G Module

Interface	Action
GigabitEthernet1/1/1	Configure this interface
GigabitEthernet1/1/2	Configure this interface
GigabitEthernet1/1/3	Configure this interface
GigabitEthernet1/1/4	Configure this interface
TenGigabitEthernet1/1/1	Disregard
TenGigabitEthernet1/1/2	Disregard
TenGigabitEthernet1/1/3	Disregard
TenGigabitEthernet1/1/4	Disregard

C9300-NM-4M Module

Table 21: C9300-NM-4M Module with 4 Multigigabit Ethernet (mGig) Module

Interface	Action
TenGigabitEthernet1/1/1	Configure this interface
TenGigabitEthernet1/1/2	Configure this interface
TenGigabitEthernet1/1/3	Configure this interface
TenGigabitEthernet1/1/4	Configure this interface

C9300-NM-2Y Module

Table 22: C9300-NM-2Y Module with 25G SFP28 Module

Interface	Action
TwentyFiveGigabitEthernet1/1/1	Configure this interface
TwentyFiveGigabitEthernet1/1/2	Configure this interface

C9300-NM-8X Module

All ports in the C9300-NM-8X module default to 10 G and should be configured as TenGigabitEthernet1/1/1 through TenGigabitEthernet1/1/8, even when you are operating them as 1 G using SFP.

Table 23: C9300-NM-8-10X Module

Interface	Action
TenGigabitEthernet1/1/1	Configure this interface
TenGigabitEthernet1/1/2	Configure this interface
TenGigabitEthernet1/1/3	Configure this interface
TenGigabitEthernet1/1/4	Configure this interface
TenGigabitEthernet1/1/5	Configure this interface
TenGigabitEthernet1/1/6	Configure this interface
TenGigabitEthernet1/1/7	Configure this interface
TenGigabitEthernet1/1/8	Configure this interface

C3850-NM-4-1G Module

All ports in the C3850-NM-4-1G module are natively GigabitEthernet and are configured GigabitEthernet1/1/1 though GigabitEthernet1/1/4. There are only four interfaces that are valid, and the other four should not be used even though they still show up in the CLI.

Table 24: C3850-NM-4-1G Module

Interface	Action
GigabitEthernet1/1/1	Configure this interface
GigabitEthernet1/1/2	Configure this interface
GigabitEthernet1/1/3	Configure this interface
GigabitEthernet1/1/4	Configure this interface
TenGigabitEthernet1/1/1	Disregard

Interface	Action
TenGigabitEthernet1/1/2	Disregard
TenGigabitEthernet1/1/3	Disregard
TenGigabitEthernet1/1/4	Disregard

C3850-NM-4-10G Module

All ports in the C3850-NM-4-10G module default to 10 G and should be configured as TenGigabitEthernet1/1/1 through TenGigabitEthernet1/1/4, even when you are operating them as 1 G using SFPs. Only four interfaces are valid; the other four should not be used even though they still show up in the CLI.

Table 25: C3850-NM-4-10G Module

Interface	Action
GigabitEthernet1/1/1	Disregard
GigabitEthernet1/1/2	Disregard
GigabitEthernet1/1/3	Disregard
GigabitEthernet1/1/4	Disregard
TenGigabitEthernet1/1/1	Configure this interface
TenGigabitEthernet1/1/2	Configure this interface
TenGigabitEthernet1/1/3	Configure this interface
TenGigabitEthernet1/1/4	Configure this interface

C3850-NM-2-10G Module

In the C3850-NM-2-10G module, the first two parts are natively 1-G ports and the last two ports are natively 10-G ports. So, you configure the 1-G posts as GigabitEthernet1/1/1 through GigabitEthernet1/1/2, and configure the last two ports as TenGigabitEthernet1/1/3 through TenGigabitEthernet1/1/4, even when you are operating the last two ports as 1-G. Only four interfaces are valid, and the other four should not be used even though they still show up in the CLI.

Table 26: C3850-NM-2-10G Module

Interface	Action
GigabitEthernet1/1/1	Configure this interface
GigabitEthernet1/1/2	Configure this interface
GigabitEthernet1/1/3	Disregard
GigabitEthernet1/1/4	Disregard
TenGigabitEthernet1/1/1	Disregard

Interface	Action
TenGigabitEthernet1/1/2	Disregard
TenGigabitEthernet1/1/3	Configure this interface, even when operating as 1-G
TenGigabitEthernet1/1/4	Configure this interface, even when operating as 1-G

C3850-NM-8-10G Module

All ports in the C3850-NM-8-10G module default to 10 G and should be configured as TenGigabitEthernet1/1/1 through TenGigabitEthernet1/1/8, even when you are operating them as 1 G using SFP.

Table 27: C3850-NM-8-10G Module

Interface	Action
TenGigabitEthernet1/1/1	Configure this interface
TenGigabitEthernet1/1/2	Configure this interface
TenGigabitEthernet1/1/3	Configure this interface
TenGigabitEthernet1/1/4	Configure this interface
TenGigabitEthernet1/1/5	Configure this interface
TenGigabitEthernet1/1/6	Configure this interface
TenGigabitEthernet1/1/7	Configure this interface
TenGigabitEthernet1/1/8	Configure this interface

C3850-NM-2-40G Module

The default port connections for the C3850-NM-2-40G module depends on whether you use a 40 G QSFP module or a 4x10G breakout cable.

If you use a 40 G QSFP module, the ports default to 40 G interfaces. In this case, the 10 G interfaces are displayed but not used.

Table 28: C3850-NM-2-40G Module with 40 G QSFP Module

Interface	Action
FortyGigabitEthernet1/1/1	Configure this interface
FortyGigabitEthernet1/1/2	Configure this interface
TenGigabitEthernet1/1/1	Disregard
TenGigabitEthernet1/1/2	Disregard
TenGigabitEthernet1/1/3	Disregard
TenGigabitEthernet1/1/4	Disregard

Interface	Action
TenGigabitEthernet1/1/5	Disregard
TenGigabitEthernet1/1/6	Disregard
TenGigabitEthernet1/1/7	Disregard
TenGigabitEthernet1/1/8	Disregard

If you use a 4x10G breakout cable, the ports default to 10 G interfaces.

Table 29: C3850-NM-2-40G Module with 4x10G breakout cable

Interface	Action
FortyGigabitEthernet1/1/1	Disregard
FortyGigabitEthernet1/1/2	Disregard
TenGigabitEthernet1/1/1	Configure this interface
TenGigabitEthernet1/1/2	Configure this interface
TenGigabitEthernet1/1/3	Configure this interface
TenGigabitEthernet1/1/4	Configure this interface
TenGigabitEthernet1/1/5	Configure this interface
TenGigabitEthernet1/1/6	Configure this interface
TenGigabitEthernet1/1/7	Configure this interface
TenGigabitEthernet1/1/8	Configure this interface

Removing a Network Module

Note The switch complies with EMC, safety, and thermal specifications when a network module is present. If no uplink ports are required, install a blank network module.

Procedure

Step 1 Attach an ESD-preventive wrist strap to your wrist and to an earth ground surface

Caution Do not remove the network module with connected cables or installed pluggable transceiver modules. Always remove any cables and modules before you remove the network module.

Caution A module interface might become error-disabled when a network module with connected fiber-optic cables is installed or removed. If an interface is error-disabled, you can reenable the interface by using the **shutdown** and **no shutdown** interface configuration commands.

Step 2 Disconnect the cables from the pluggable transceiver module.

Step 3 Remove the pluggable transceiver module from the network module.

Step 4 Loosen the captive screws that hold the network module in place until it completely disengages from the chassis.

Note The C3850-NM-8-10G module is held secure in the switch by only one jackscrew. This screw also helps to eject the module from its connector interface. Before the module can be removed completely, the screw must be unscrewed all the way out. When removing the screw, a spring pushes the module out when the screw is completely disengaged. Ensure that you hold the module securely until it is completely removed.

Step 5 Carefully slide the network module out of the slot.

Step 6 Install a replacement network module or a blank module in the slot.

Step 7 Place the module that you removed in an antistatic bag or other protective environment.

Installing and Removing Cisco Transceiver Modules

Installing a Cisco Pluggable Transceiver Module

Before you begin

You must have an installed network module to use the transceiver modules. See the switch release notes on Cisco.com for the list of supported pluggable transceiver modules. Use only supported pluggable transceivers on the switch. For the latest information about supported transceiver modules, refer to the Cisco Transceiver Modules Compatibility Information.

For information about installing, removing, cabling, and troubleshooting pluggable transceiver modules, see the module documentation that shipped with your device.

Observe these precautions:

Warning Class 1 laser product. Statement 1008

- Do not remove the dust plugs from the pluggable transceiver modules or the rubber caps from the fiber-optic cable until you are ready to connect the cable. The plugs and caps protect the module ports and cables from contamination and ambient light.
- Removing and installing a pluggable transceiver module can shorten its useful life. Do not remove and insert any module more often than is necessary.
- To prevent ESD damage, follow your normal board and component handling procedures when connecting cables to the switch and other devices.

- When you insert several pluggable transceiver modules in multiple switch ports, wait for 5 seconds between inserting each module. This will prevent the ports from going into error disabled mode. Similarly, when you remove a pluggable transceiver module from a port, wait for 5 seconds before reinserting it.

Procedure

Step 1 Attach an ESD-preventive wrist strap to your wrist and to an earth ground surface.

Step 2 Find the send (TX) and receive (RX) markings that identify the top of the transceiver module.

On some modules, the send and receive (TX and RX) markings might be shown by arrows that show the direction of the connection.

Step 3 If the pluggable transceiver module has a bale-clasp latch, move it to the open, unlocked position.

Step 4 Align the module in front of the slot opening, and push until you feel the connector snap into place.

Figure 31: Installing a Pluggable Transceiver Module in the Network Module

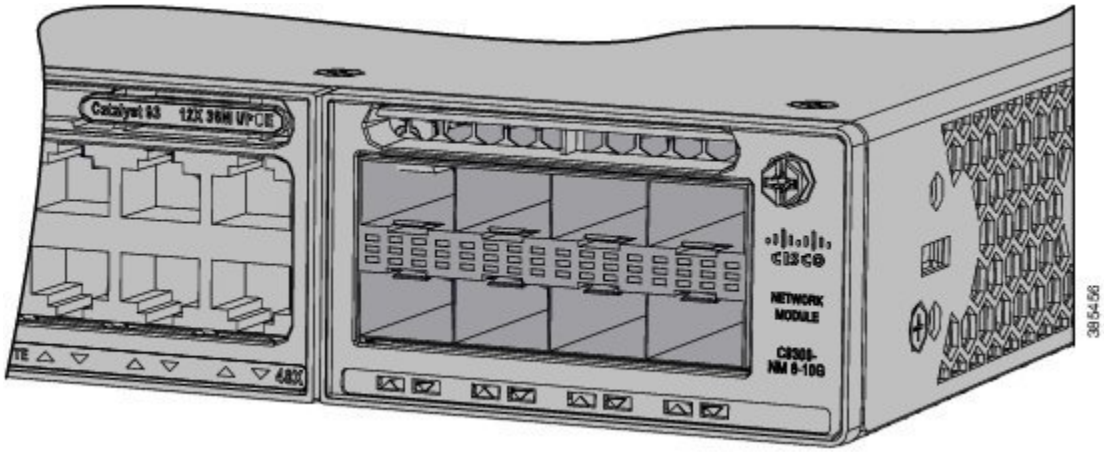

Step 5 If the module has a bale-clasp latch, close it to lock the module in place.

Step 6 Remove the dust plugs and save.

Step 7 Connect the transceiver cables.

Figure 32: Network Module with Pluggable Transceiver Modules Installed

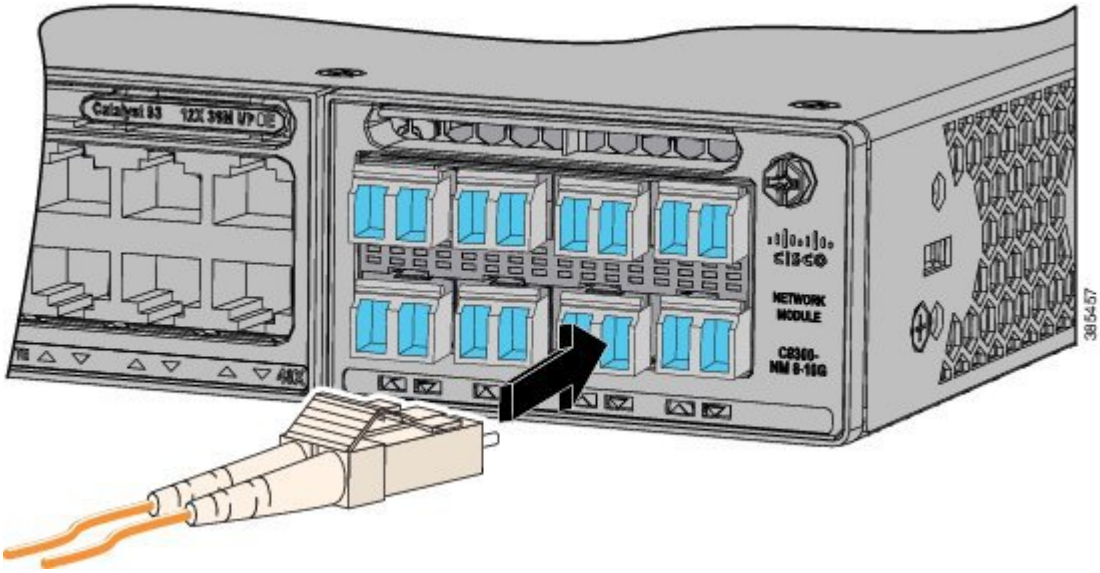

Removing Cisco Pluggable Transceiver Modules

Procedure

Step 1 Attach an ESD-preventive wrist strap to your wrist and to an earth ground surface.

Step 2 Disconnect the cable from the transceiver module. For reattachment, note which cable connector plug is send (TX) and which is receive (RX).

Step 3 Insert a dust plug into the optical ports of the transceiver module to keep the optical interfaces clean.

Step 4 If the transceiver module has a bale-clasp latch, pull the bale out and down to eject the module. If you cannot use your finger to open the latch, use a small, flat-blade screwdriver or other long, narrow instrument to open it.

Step 5 Grasp the transceiver module, and carefully remove it from the slot.

Step 6 Place the transceiver module in an antistatic bag or other protective environment.

Finding the Network Module Serial Number

If you contact Cisco Technical Assistance regarding a network module, you need to know its serial number.

Figure 33: Network Module Serial Number Location

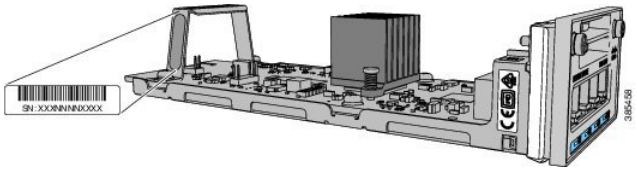

CHAPTER 4

Installing a Power Supply

- Power Supply Modules Overview, on page 65
- Installation Guidelines, on page 69
- Installing or Replacing an AC Power Supply, on page 70
- Installing a DC Power Supply, on page 72
- Finding the Power Supply Module Serial Number, on page 77

Power Supply Modules Overview

The switch operates with either one or two active power supply modules. A switch that is part of a StackPower stack operates with power that is supplied by other stack switches.

You can use two AC modules or one module and blank cover. All power supply modules have internal fans. All switches ship with a blank cover in the second power supply slot.

The following table describes the supported internal power supply modules. It lists the Platinum certified power supply modules and the default modules that are shipped with the switch. In a switch, a mix of Platinum certified and non-Platinum certified power supply modules is supported.

Table 30: Power Supply Module Part Numbers and Descriptions

Part Number	Description
PWR-C1-1100WAC	1100W AC power supply module
PWR-C1-715WAC	715W AC power supply module
PWR-C1-350WAC	350W AC power supply module
PWR-C1-350WAC-P	350W AC Platinum certified power supply module
PWR-C1-715WAC-P	715W AC Platinum certified power supply module
PWR-C1-1100WAC-P	1100W AC Platinum certified power supply module
PWR-C1-715WDC	715W DC power supply module
PWR-C1-BLANK	Blank cover

For information on available PoE, PoE+, and Cisco UPOE/UPOE+ requirements, see these sections the Power Supply Modules, on page 20.

The 350W and 715W AC power supply modules are autoranging units that support input voltages from 100 through 240 VAC. The 1100W power supply module is an autoranging unit that supports input voltages from 115 through 240 VAC.

Each AC power supply module has a power cord for connection to an AC power outlet. To view the list of available AC power cords, see AC Power Cord Specifications, on page 111.

The following illustrations show the power supply modules.

Figure 34: 1100W AC Power Supply

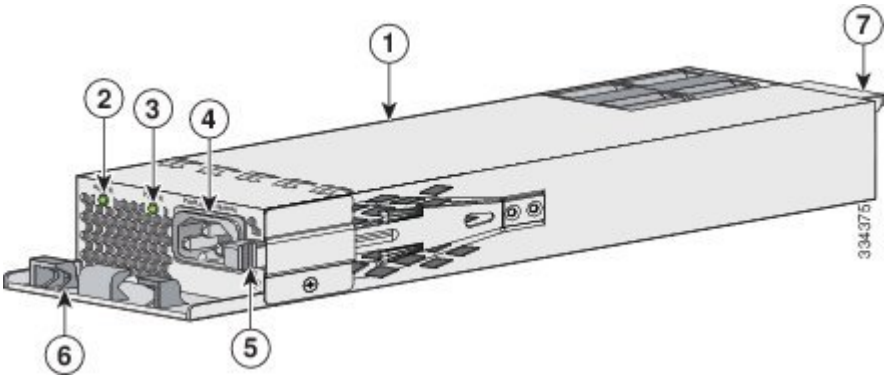

1	1100W AC power supply module	5	Release latch
2	AC OK LED	6	Power cord retainer
3	PS OK LED	7	Keying feature
4	AC power cord connector		

Figure 35: 715W AC Power Supply

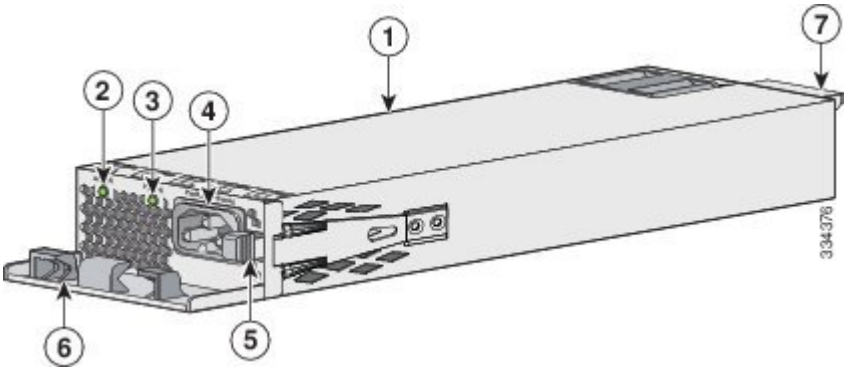

1	715W AC power supply module	5	Release latch
2	AC OK LED	6	Power cord retainer

3	PS OK LED	7	Keying feature
4	AC power cord connector		

Figure 36: 350W AC Power Supply

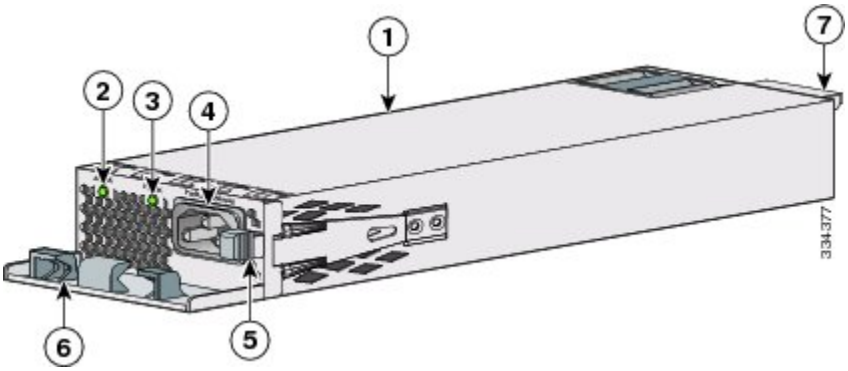

1	350W AC power supply module	5	Release latch
2	AC OK LED	6	Power cord retainer
3	PS OK LED	7	Keying feature
4	AC power cord connector		

Figure 37: 715W DC Power Supply

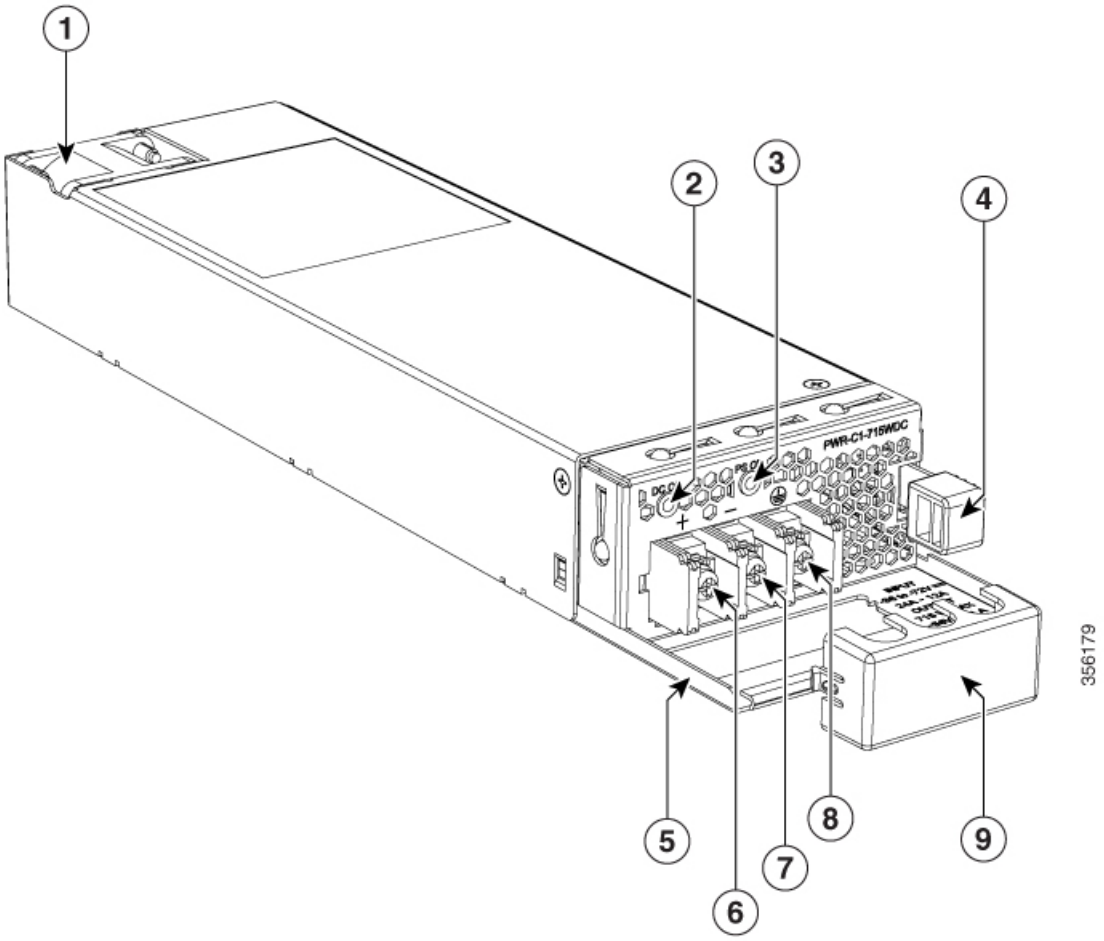

1	715W DC power supply module	6	Input power terminal (positive polarity)
2	DC OK LED	7	Input power terminal (negative polarity)
3	PS OK LED	8	Grounding terminal
4	Release latch	9	Terminal block safety cover
5	Extraction handle	-	-

If no power supply is installed in a power supply slot, install a power supply slot cover.

Figure 38: Power Supply Slot Cover

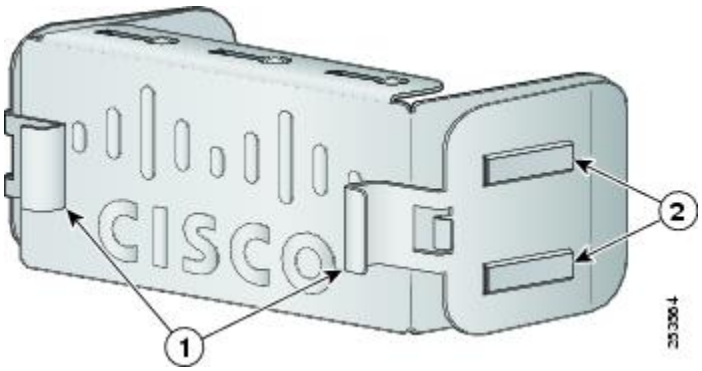

1	Release handles	2	Retainer clips

Table 31: Switch Power Supply Module LEDs

AC OK	Description	PS OK	Description
Off	No AC input power.	Off	Output is disabled, or input is outside operating range (AC LED is off).
Green	AC input power present.	Green	Power output to switch active.
		Red	Output has failed.

Installation Guidelines

Observe these guidelines when removing or installing a power supply or fan module:

- Do not force the power supply or fan module into the slot. This can damage the pins on the switch if they are not aligned with the module.
- A power supply that is only partially connected to the switch can disrupt the system operation.
- Remove power from the power-supply module before removing or installing the module.
- The power supply is hot-swappable. In some configurations, such as full PoE+ or power sharing mode, removing a power supply causes powered devices to shut down until the power budget matches the input power of a single power supply. To minimize network interruption, hot swap the power supply under these circumstances:
  - The switch is in StackPower mode and sufficient power is available.
  - The switch is powered by other switches in a power stack, and no active backup is in progress.

  For the switch commands that display available power budget, see the software configuration guide.

Caution Do not operate the switch with one power-supply module slot empty. For proper chassis cooling, both module slots must be populated, with either a power supply or a blank module.

Warning This equipment must be grounded. Never defeat the ground conductor or operate the equipment in the absence of a suitably installed ground conductor. Contact the appropriate electrical inspection authority or an electrician if you are uncertain that suitable grounding is available.

Statement 1024

Warning Blank faceplates and cover panels serve three important functions: they prevent exposure to hazardous voltages and currents inside the chassis; they contain electromagnetic interference (EMI) that might disrupt other equipment; and they direct the flow of cooling air through the chassis. Do not operate the system unless all cards, faceplates, front covers, and rear covers are in place.

Statement 1029

Warning Do not reach into a vacant slot or chassis while you install or remove a module. Exposed circuitry could constitute an energy hazard.

Statement 206

Warning Only trained and qualified personnel should be allowed to install, replace, or service this equipment.

Statement 1030

Warning If a Cisco external power system is not connected to the switch, install the provided connector cover on the back of the switch.

Statement 386

Installing or Replacing an AC Power Supply

Procedure

Step 1 Turn off the power at its source.

Step 2 Remove the power cord from the power cord retainer.

Step 3 Remove the power cord from the power connector.

Step 4 Press the release latch at the right side of the power supply module inward and slide the power supply out.

Caution Do not leave the power-supply slot open for more than 90 seconds while the switch is operating.

Warning This unit might have more than one power supply connection. All connections must be removed to de-energize the unit. Statement 1028

Step 5 Insert the new power supply into the power-supply slot, and gently push it into the slot. When correctly inserted, the 350-W and 715-W power supplies (excluding the power cord retainer) are flush with the switch rear panel. The 1100-W power-supply module extends 1.5 inches from the switch rear panel.

Figure 39: Inserting the AC-Power Supply in the Switch

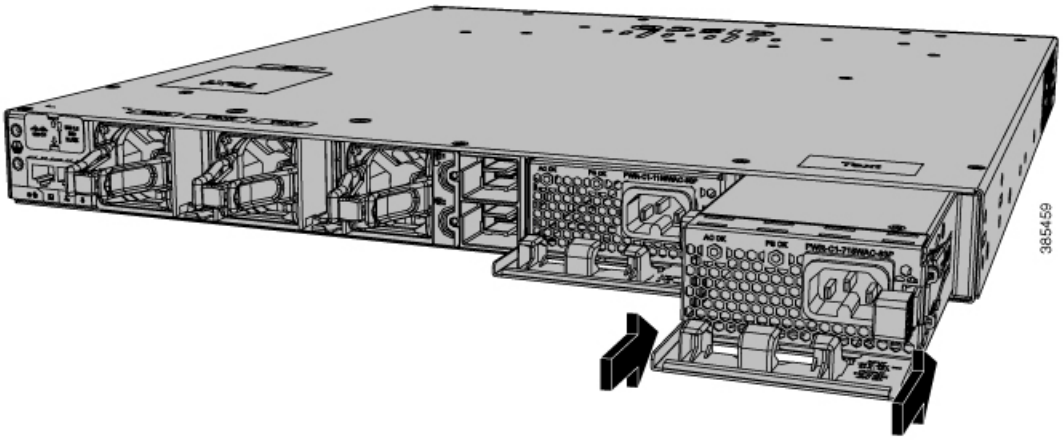

Step 6 (Optional) Make a loop in the power cord and thread it through the power cord retainer.

Figure 40: AC-Power Supply with Power Cord Retainer

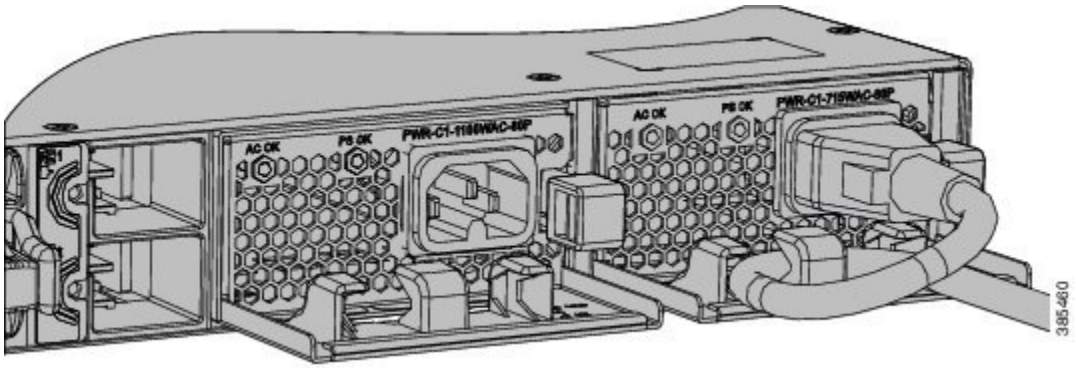

Step 7 Connect the power cord to the power supply and to an AC power outlet. Turn on the power at the power source.

Step 8 Confirm that the power supply AC OK and PS OK LEDs are green.

Installing a DC Power Supply

Warning An exposed wire lead from a DC-input power source can conduct harmful levels of electricity. Be sure that no exposed portion of the DC-input power source wire extends from the terminal block plug. Statement 122

Warning Before performing any of the following procedures, ensure that power is removed from the DC circuit. Statement 1003

Warning This product relies on the building's installation for short-circuit (overcurrent) protection. Ensure that the protective device is rated not greater than: 20 A. Statement 1005

Warning A readily accessible two-poled disconnect device must be incorporated in the fixed wiring. Statement 1022

Warning Hazardous voltage or energy may be present on power terminals. Always replace cover when terminals are not in service. Be sure uninsulated conductors are not accessible when cover is in place. Statement 1086

Note The grounding architecture of this product is DC-isolated (DC-I).

Equipment That You Need

- Ratcheting torque screwdriver with a number-2 Phillips head that exerts up to 15 pound-force inches (lbf-in.) of pressure.
- Panduit crimping tool with optional controlled-cycle mechanism (model CT-720, CT-920, CT-920CH, CT-930, or CT-940CH).
- Wire-stripping tools.
- 12-gauge copper ground wire (insulated or not) for the single-hole ground connection.
- 8-gauge copper ground wire (insulated or not) for the dual-hole ground connection.
- Dual-hole ground lug and two screws (included in the DC power supply accessory kit) and single-hole ground lug and screw (included in the switch accessory kit). The dual-hole lug is required for the grounding of the switch in NEBS installations where the DC supply is the only NEBS compliant power supply option.
- Four leads of 14-gauge copper wire.

- Four fork-type terminals from the DC power supply accessory kit. The terminals must be the proper size for M3 screws in a Dinkle DT-35-B25-style terminal block.
- M5 screws for 12 AWG wire connection for NEBS installations.

Grounding the Switch

Follow these steps to install either a single-hole ground lug or a dual-hole ground lug on the switch. Make sure to follow any grounding requirements at your site.

Before you begin

Follow the grounding procedures at your site and observe these warnings:

Warning This equipment must be grounded. Never defeat the ground conductor or operate the equipment in the absence of a suitably installed ground conductor. Contact the appropriate electrical inspection authority or an electrician if you are uncertain that suitable grounding is available. Statement 1024

Warning When installing or replacing the unit, the ground connection must always be made first and disconnected last. Statement 1046

Caution Follow the grounding procedure instructions, and use a UL-listed lug (included in the accessory kit).

Caution To comply with the Telcordia GR-1089 NEBS standard for electromagnetic compatibility and safety, connect the (Management Ethernet) ports only to intra-building or unexposed wiring or cable. The intrabuilding cable must be shielded and the shield must be grounded at both ends. The intra-building port(s) of the equipment or subassembly must not be metallically connected to interfaces that connect to the OSP or its wiring. These interfaces are designed for use as intra-building interfaces only (Type 2 or Type 4 ports as described in GR-1089-CORE) and require isolation from the exposed OSP cabling. The addition of Primary Protectors is not sufficient protection in order to connect these interfaces metallically to OSP wiring.

Procedure

Step 1 Use the ground lug screw and the lug ring for single-ground connections. Use the dual-hole lug for ground connections for NEBS installation.

Step 2 Strip the 12-gauge or 8-gauge ground wire to 0.5 inch (12.7 mm) ± 0.02 inch (0.5 mm). Stripping more than the recommended amount of wire can leave exposed wire from the connector. Use 12-gauge copper ground wire for the single-ground connection. Use 8-gauge copper ground wire for the dual-ground connection.

Figure 41: Stripping the Ground Wire

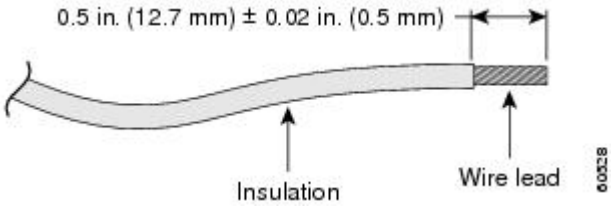

Step 3 Slide the open end of the ground lug over the exposed area of the wire.

Step 4 Using a Panduit crimping tool, crimp the ground lug to the wire.

Figure 42: Crimping the Ground Lug

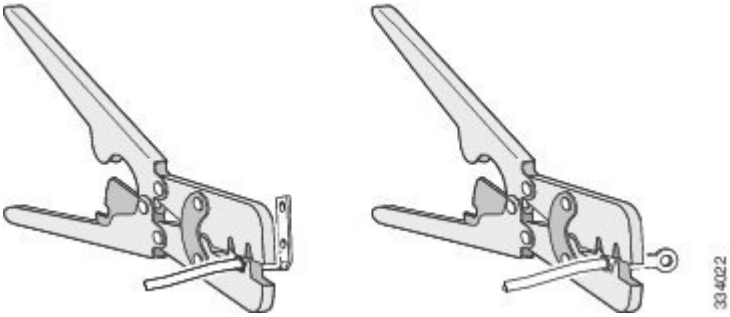

Step 5 Use the ground screw to attach the single-hole ground lug to the switch rear panel. Use two ground screws to attach the dual-hole ground lug to the switch rear panel.

Figure 43: Attaching the Ground Lug and Wire Assembly

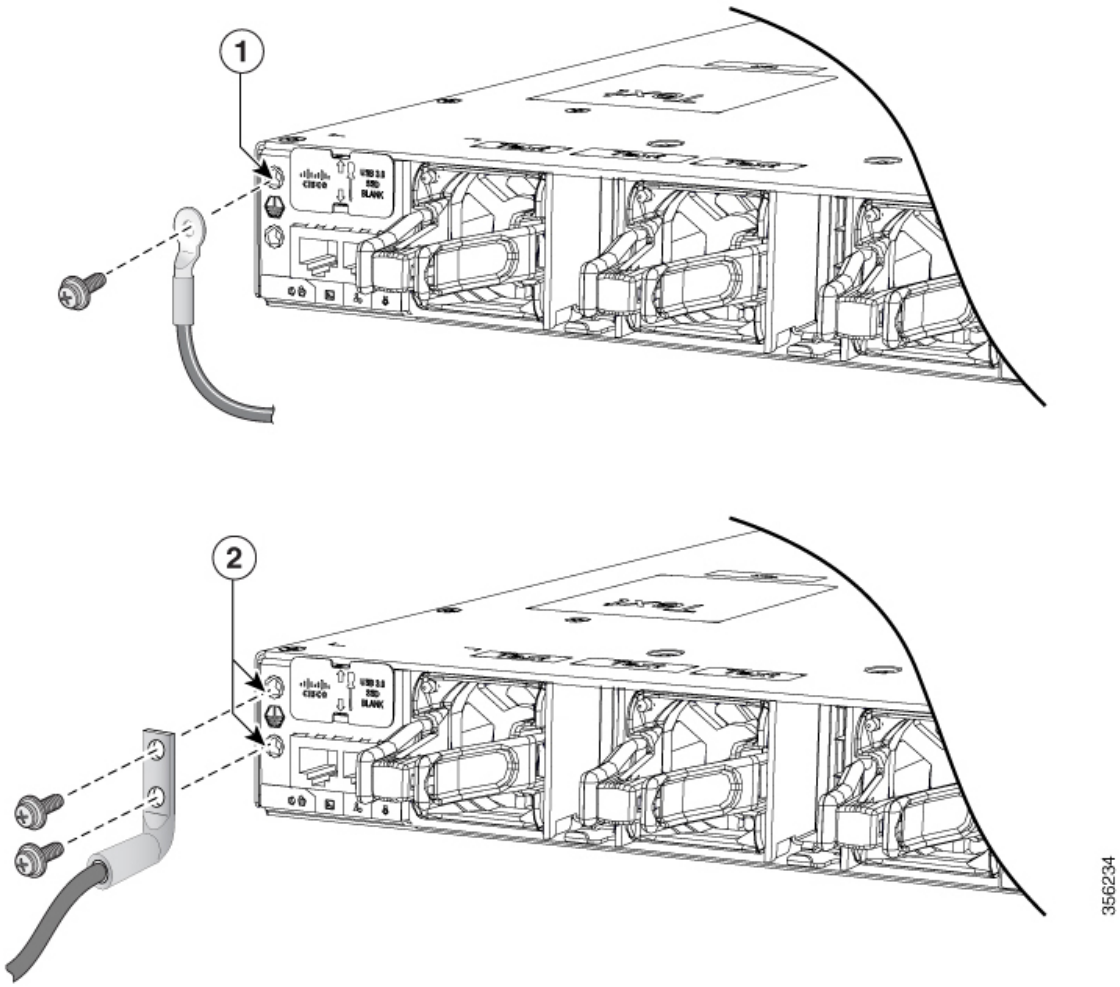

1	Attaching the single-hole ground lug	2	Attaching the dual-hole ground lug

Step 6 Using a ratcheting torque screwdriver, torque the ground-lug screws to 60 lbf-in. (960 ozf-in.).

Step 7 Connect the other end of the grounding wire to an appropriate grounding point at your site or to the rack.

Installing the DC Power Supply in the Switch

Before you begin

Before installing the power supply, see the Installation Guidelines, on page 69.

Procedure

Step 1 Verify that the power supply is not connected to any power sources.

Step 2 Remove the plastic safety cover from the power supply terminal blocks.

Note If you are not replacing a DC power supply, go to Step 5.

Step 3 Use a number-2 Phillips screwdriver to remove the DC-input power wires from the power terminals.

Step 4 Press the release latch at the right side of the power supply module inward, and pull the power supply out.

Step 5 Insert the power supply in the power-supply slot, and gently push it into the slot. When correctly installed, the DC power supply (excluding the extraction handle) is flush with the switch rear panel.

Figure 44: Inserting a DC-Power Supply

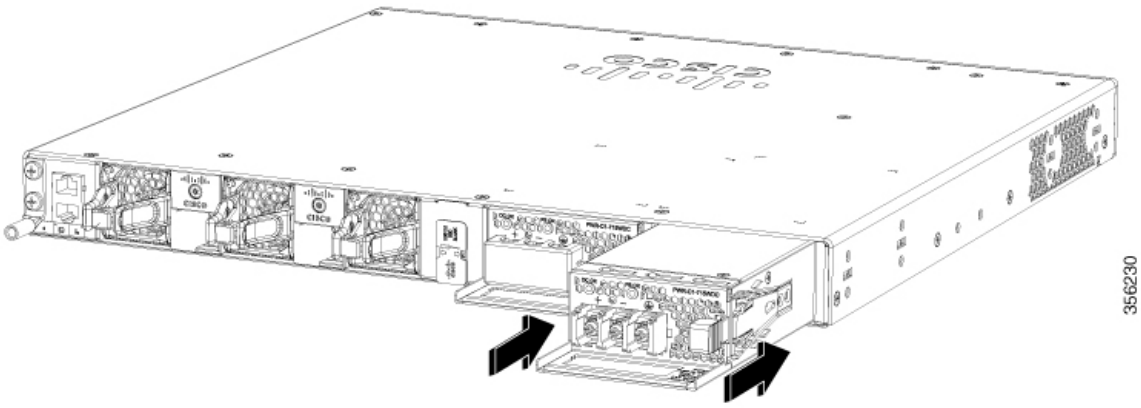

Step 6 Connect the input power as described in Wiring the DC Input Power Source, on page 76.

Wiring the DC Input Power Source

Procedure

Step 1 Using a wire-stripping tool, strip the wires from the DC-input power source to the appropriate length for the terminals.

Warning Use copper conductors only. Statement 1025

Step 2 Using a Panduit crimping tool, crimp the fork-type terminals to the copper conductor, 90C, 12-AWG DC power input wires.

Step 3 Connect the DC-input power terminals to the terminal blocks. Connect the ground wire to a grounded metal rack or to earth ground if the switch is not in a grounded rack.

Figure 45: DC Connection with Ground

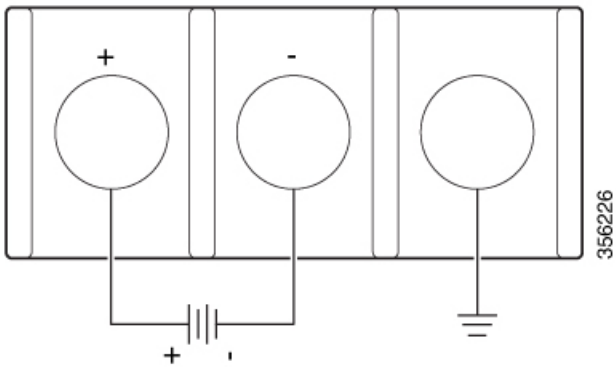

Step 4 Torque all terminal block screws to 11 lbf-in.

Step 5 Replace the terminal block safety cover and turn on the power at the power source.

Step 6 Confirm that the power supply DC OK and PS OK LEDs are green.

Finding the Power Supply Module Serial Number

If you contact Cisco Technical Assistance regarding a power supply module, you need to know the serial number. See the following illustrations to find the serial number. You can also use the CLI to find out the serial number.

Figure 46: 1100-W AC Power Supply Serial Number

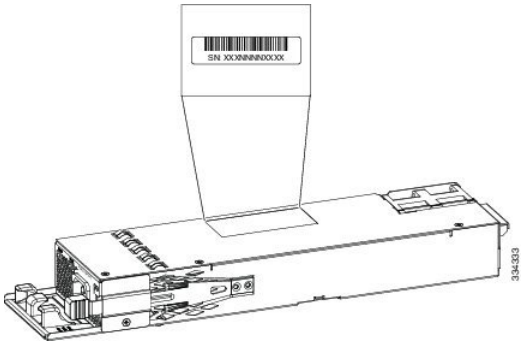

Figure 47: 715-W and 350-W AC Power Supply Serial Number

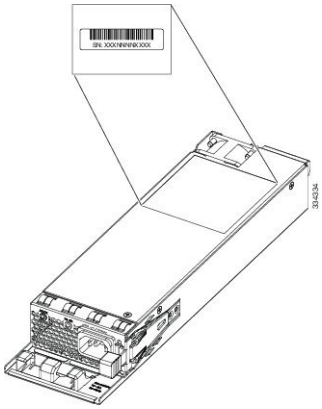

CHAPTER 5

Installing a Fan Module

- Fan Modules Overview , on page 79
- Installation Guidelines, on page 80
- Installing a Fan Module, on page 80
- Finding the Fan Module Serial Number, on page 81

Fan Modules Overview

The switch has three internal hot-swappable fans. A powered switch should always have more than one operational fan. The switch can operate with two operational fans and one nonfunctional fan, but the failed fan should be replaced as soon as possible to avoid a service interruption due to a second fan fault.

Danger Sharp edges on the fan module can cause serious injury. Keep fingers clear.

Figure 48: Fan Module

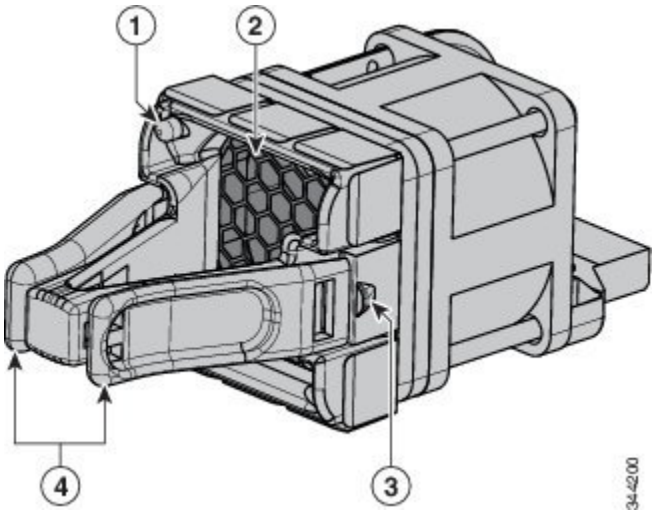

1	Fan LED	3	Retainer clip
2	Exhaust vent	4	Extraction handles

Note The switch requires three fans for proper cooling.

Installation Guidelines

Observe these guidelines when removing or installing a fan module:

- Do not force the fan module into the slot. This can damage the pins on the switch if they are not aligned with the module.
- A fan module that is only partially connected to the switch can disrupt the system operation.
- The switch supports hot swapping of the fan module. You can remove and replace the module without interrupting normal switch operation.

Warning Only trained and qualified personnel should be allowed to install, replace, or service this equipment. Statement 1030

Installing a Fan Module

Procedure

Step 1 Pinch the fan module release handle, and slide the module out.

Caution You should replace the fan module within 5 minutes to avoid overheating the switch.

Step 2 Install the fan module in the fan slot, and firmly push it into the slot, applying pressure to the end of the module, not the extraction handles. When correctly inserted, the fan module is flush with the switch rear panel. When the fan is operating, a green LED is on in the top left corner of the fan.

Warning Do not reach into a vacant slot when installing or removing a module. Exposed circuitry is an energy hazard. Statement 206

Figure 49: Installing the Fan Module

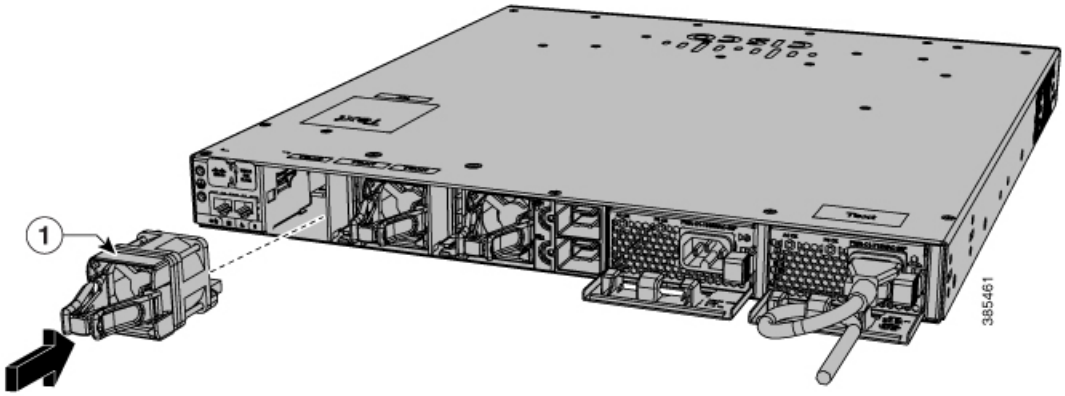

1	Fan LED

Note Ensure that the fans are inserted correctly to match the corresponding power supplies. Fans with blue handles correspond to power supplies with blue handles, and fans with red handles correspond to power supplies with red handles.

Finding the Fan Module Serial Number

If you contact Cisco Technical Assistance regarding a fan module, you need to know the fan module serial number. See the following illustration to find the serial number.

Figure 50: Fan Module Serial Number

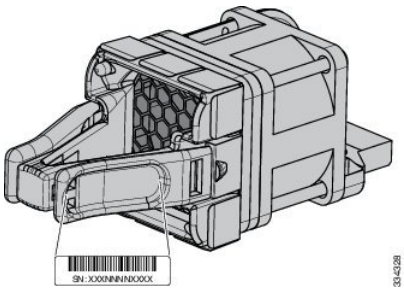

CHAPTER 6

Installing a USB 3.0 SSD

- USB 3.0 SSD Overview, on page 83
- Installing an SSD-120G, on page 84

USB 3.0 SSD Overview

The USB 3.0 Solid State Drive (SSD) port on the rear panel of the switch supports an optional 120GB USB 3.0 SSD storage device (SSD-120G). SSD-120G provides an extra 120GB of storage for application hosting. Applications can be hosted in KVM (Kernel-based Virtual Machines), LXC (Linux Containers), or Docker containers. SSD-120G can also be used to save packet captures, trace logs generated by the operating system, Graceful Insertion and Removal (GIR) snapshots and third-party applications. SSD-120G can be used simultaneously as a general-purpose storage device and as an app hosting device. You must use only Cisco USB drives; non-Cisco USB drives are not supported.

SSD-120G is enabled with S.M.A.R.T (Self-Monitoring, Analysis and Reporting Technology) functionality to monitor endurance, predict wear-out and carry out various self-tests.

Figure 51: SSD-120G

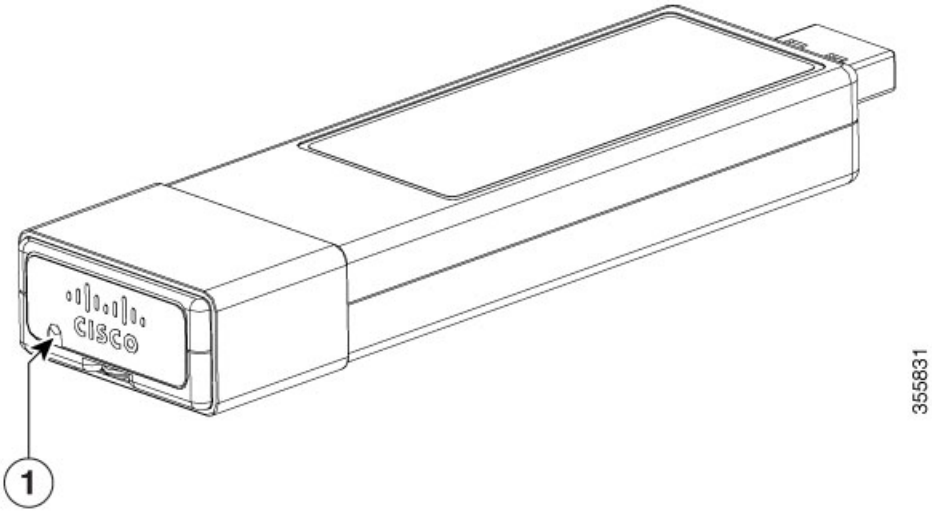

1	Status LED

Installing an SSD-120G

Procedure

Step 1 Remove the blank cover on the USB 3.0 SSD slot on the switch and store it for future use.

Step 2 Insert the SSD-120G into the module slot, and firmly push it into the slot. Make sure your insert the SSD-120G in such a way that the Cisco label on the drive stays upright.

Figure 52: Installing SSD-120G on a Cisco Catalyst 9300 Series Switch

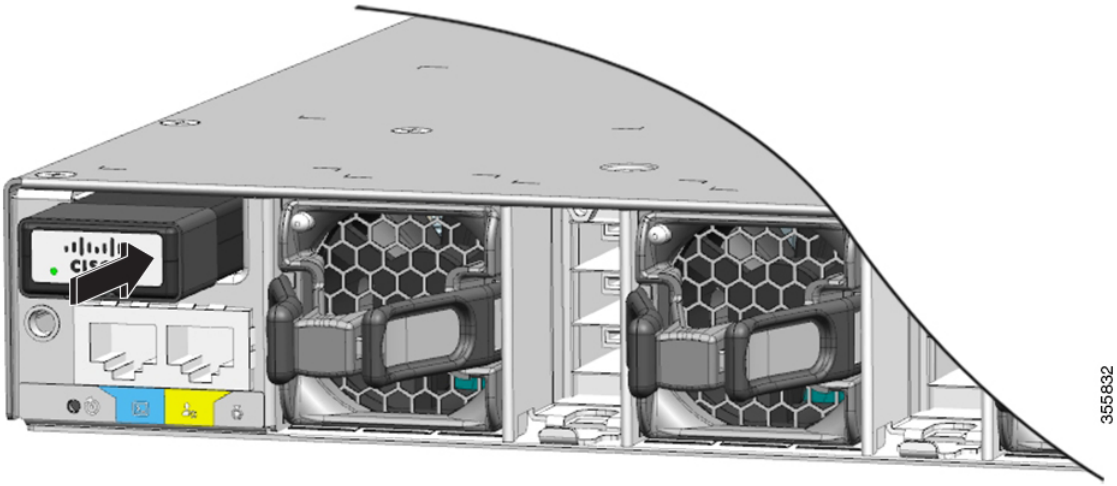

Figure 53: Installing SSD-120G on a Cisco Catalyst 9300L Series Switch

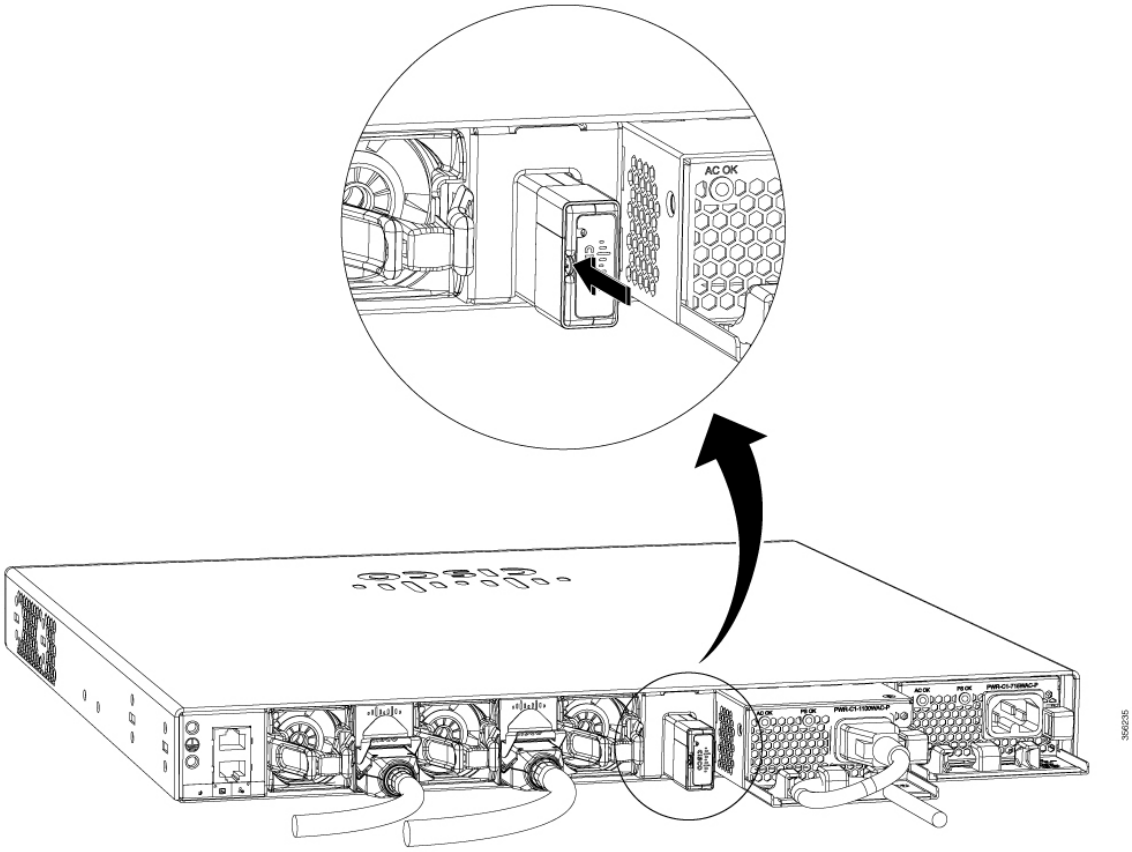

Step 3 Verify that the LED on SSD-120G turns solid green.

What to do next

For information about formatting and unmounting an SSD-120G, see "Configuring USB 3.0 SSD" section in the *Interface and Hardware Components Configuration Guide*.

CHAPTER 7

Configuring the Switch

- Configuring the Switch Using the Web User Interface, on page 87
- Configuring the Switch Using the CLI, on page 101

Configuring the Switch Using the Web User Interface

Setting up the Switch

After you complete the hardware installation, you need to setup the switch with configuration required to enable traffic to pass through the network. On your first day with your new device, you can perform a number of tasks to ensure that your device is online, reachable and easily configured.

The Web User Interface (Web UI) is an embedded GUI-based device-management tool that provides the ability to provision the device, to simplify device deployment and manageability, and to enhance the user experience. It comes with the default image, so there is no need to enable anything or install any license on the device. You can use WebUI to build configurations, and to monitor and troubleshoot the device without having CLI expertise.

Connecting to the Switch

Before you begin

Set up the DHCP Client Identifier on the client to get the IP address from the switch, and to be able to authenticate with Day 0 login credentials.

Setting up the DHCP Client Identifier on the client for Windows

1. Type **`regedit`** in the Windows search box on the taskbar and press *enter*.
2. If prompted by User Account Control, click **Yes** to open the Registry Editor.
3. Navigate to

   Computer\HKEY_LOCAL_MACHINE\SYSTEM\CurrentControlSet\Services\Tcpip\Parameters\Interfaces and locate the **Ethernet Interface** Global Unique Identifier (GUID).
4. Add a new REG_BINARY **DhcpClientIdentifier** with Data **77 65 62 75 69** for **`webui`**. You need to manually type in the value.

Figure 54: Setting up DHCP Client Identifier on Windows

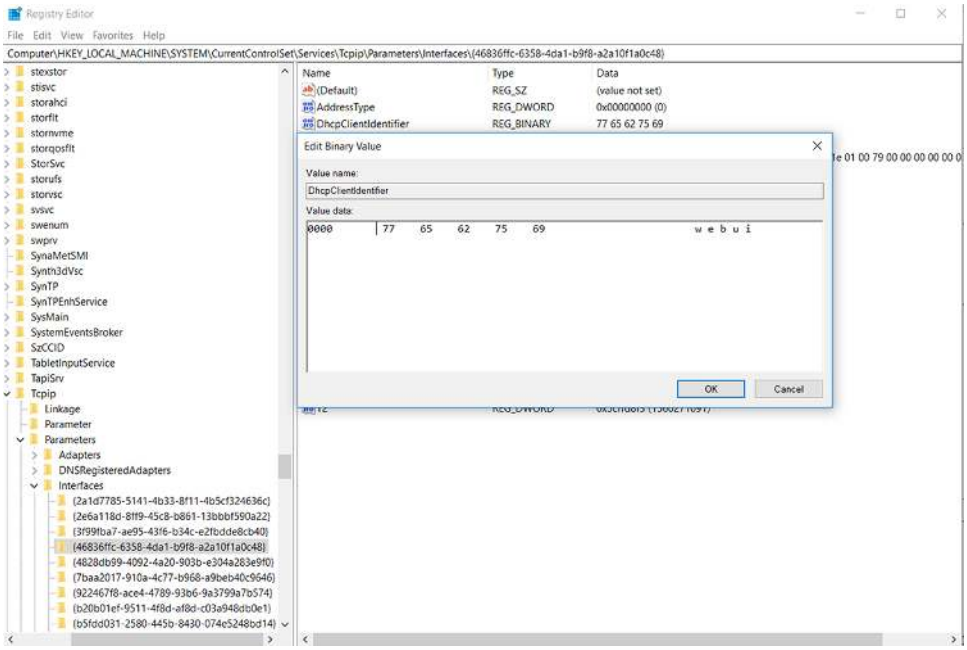

5. Restart the PC for the configuration to take effect.

Setting up the DHCP Client Identifier on the client for MAC

1. Go to **System Preferences >Network >Advanced >TCP >DHCP Client ID:** and enter **`webui`**.

Figure 55: Setting up DHCP Client Identifier on MAC

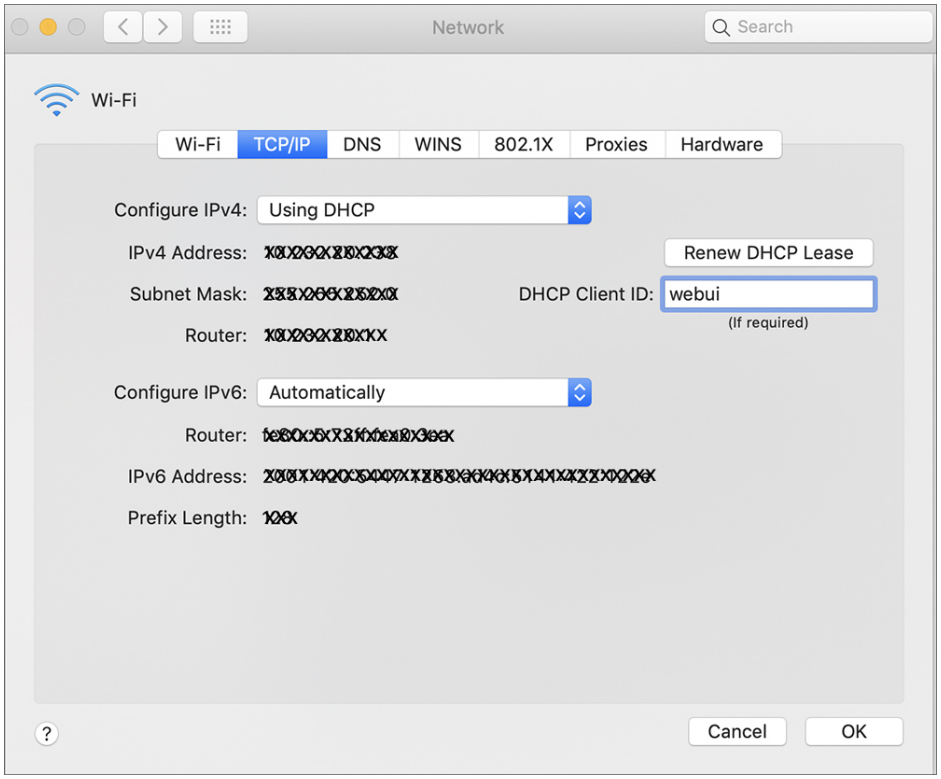

2. Click **OK** to save the changes.

The bootup script runs the configuration wizard, which prompts you for basic configuration input: (**Would you like to enter the initial configuration dialog? [yes/no]:**). To configure Day 0 settings using the web UI, do not enter a response. Perform the following tasks instead:

Procedure

Step 1 Make sure that no devices are connected to the switch.

Step 2 Connect one end of an ethernet cable to one of the downlink (non-management) ports on the active supervisor and the other end of the ethernet cable to the host (PC/MAC).

Step 3 Set up your PC/MAC as a DHCP client, to obtain the IP address of the switch automatically. You should get an IP address within the 192.168.1.x/24 range.

Figure 56: Obtaining the IP Address

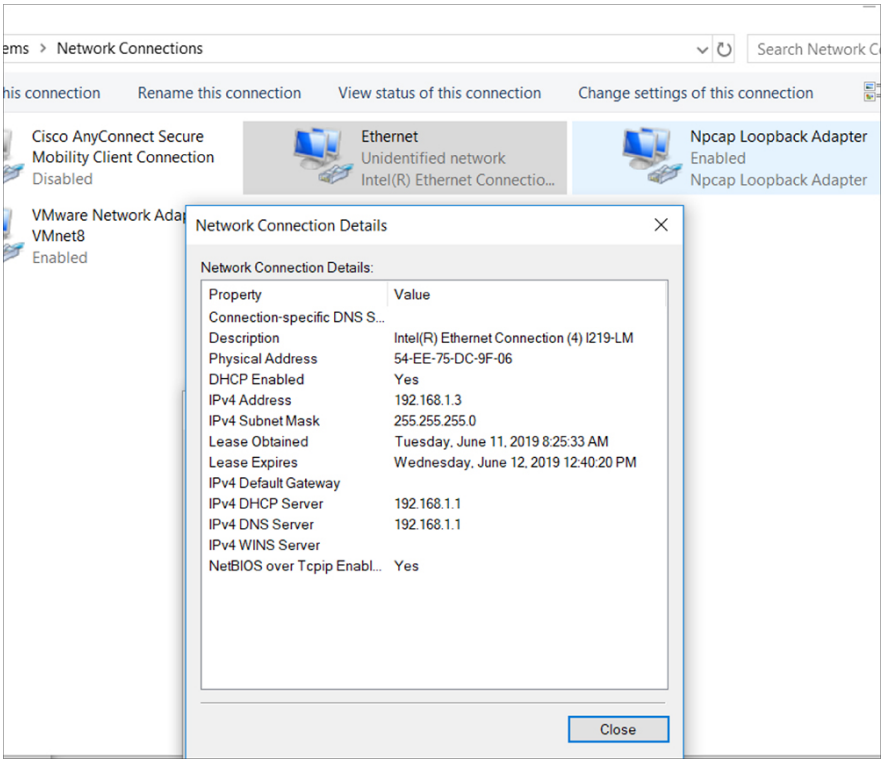

It may take up to three mins. You must complete the Day 0 setup through the web UI before using the device terminal.

Step 4 Launch a web browser on the PC and enter the device IP address (**`https://192.168.1.1`**) in the address bar.

Step 5 Enter the Day 0 **username** **`webui`** and **password** **`serial number`** of the switch. Note that the serial number is case sensitive.

Note The Day 0 username and password depends on the software version of your switch.

For Cisco Catalyst switches running software versions earlier than Cisco IOS XE Fuji 16.9.x, the default username is **`webui`**; the default password is the serial number of the switch chassis.

For Cisco Catalyst switches running software version Cisco IOS XE Amsterdam 17.1.x, the default username is **`webui`**; the default password is **`cisco`**.

What to do next

Create a user account.

Creating User Accounts

Setting a username and password is the first task you will perform on your device. Typically, as a network administrator, you will want to control access to your device and prevent unauthorized users from seeing your network configuration or manipulating your settings.

Procedure

Step 1 Log on using the default username and password provided with the device. These details differ based on the software version of your switch.

The default username is **`cisco`**; the default password is the serial number of the switch chassis. For Cisco Catalyst switches running software versions earlier than Cisco IOS XE Fuji 16.9.x, the default username is **`webui`**; the default password is the serial number of the switch chassis.

Step 2 Set a password of up to 25 alphanumeric characters. The username password combination you set gives you privilege 15 access. The string cannot start with a number, is case sensitive, and allows spaces but ignores leading spaces.

Figure 57: Create Account

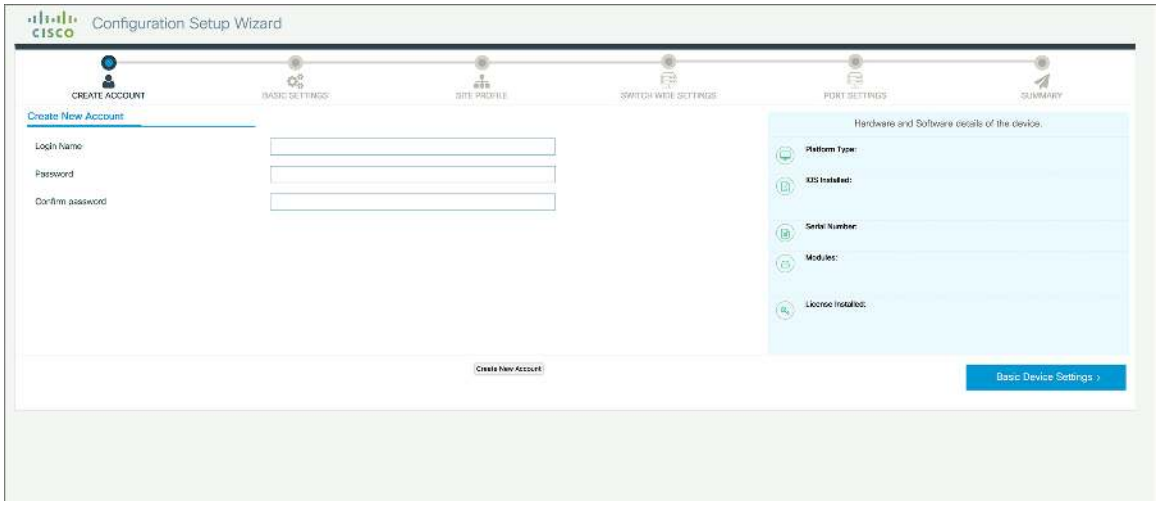

Choosing Setup Options

Select **Wired Network** to configure your device based on a site profile, and continue to configure switch wide settings. Otherwise, continue to the next step and configure only basic settings for your device.

Configuring Basic Device Settings

On the **Basic Device Settings** page configure the following information:

Procedure

Step 1 In the **Device ID and Location Settings** section, type a unique name to identify your device in the network.

Step 2 Choose the date and time settings for your device. To synchronize your device with a valid outside timing mechanism, such as an NTP clock source, choose Automatic, or choose Manual to set it yourself.

Figure 58: Basic Settings - Device ID and Location Settings

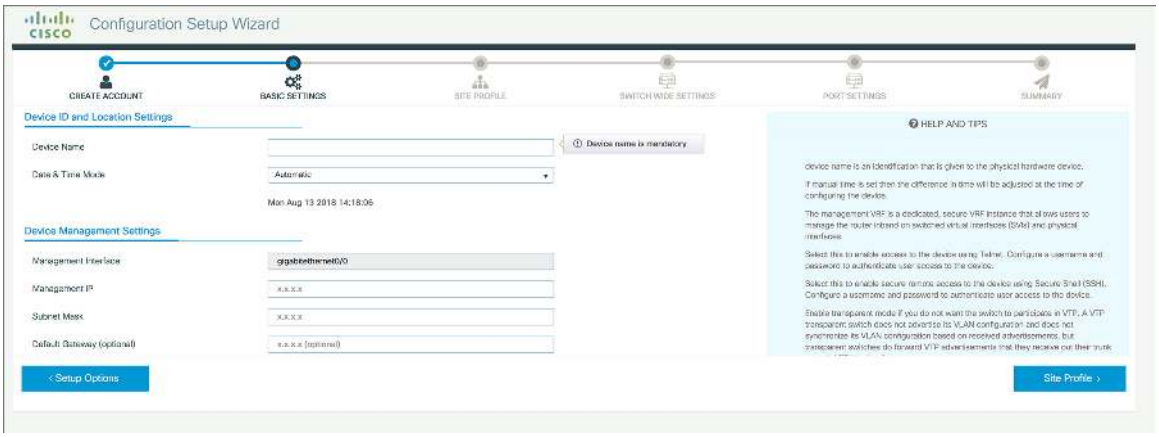

Step 3 In the **Device Management Settings** section, assign an `IP address` to the management interface. Ensure that the IP address you assign is part of the subnet mask you enter.

Step 4 Optionally, enter an `IP address` to specify the default gateway.

Step 5 To enable access to the device using telnet, check the **Telnet** check box.

Step 6 To enable secure remote access to the device using Secure Shell (SSH), check the **SSH** check box.

Step 7 Check the **VTP transparent mode** check box to disable the device from participating in VTP.

If you did not select **Wired Network**, in the earlier step, continue to the next screen to verify your configuration on the **Day 0 Config Summary** screen, and click **Finish**. To automatically configure your device based on a site profile, click **Setup Options**, and select **Wired Network**.

Figure 59: Basic Settings - Device Management Settings

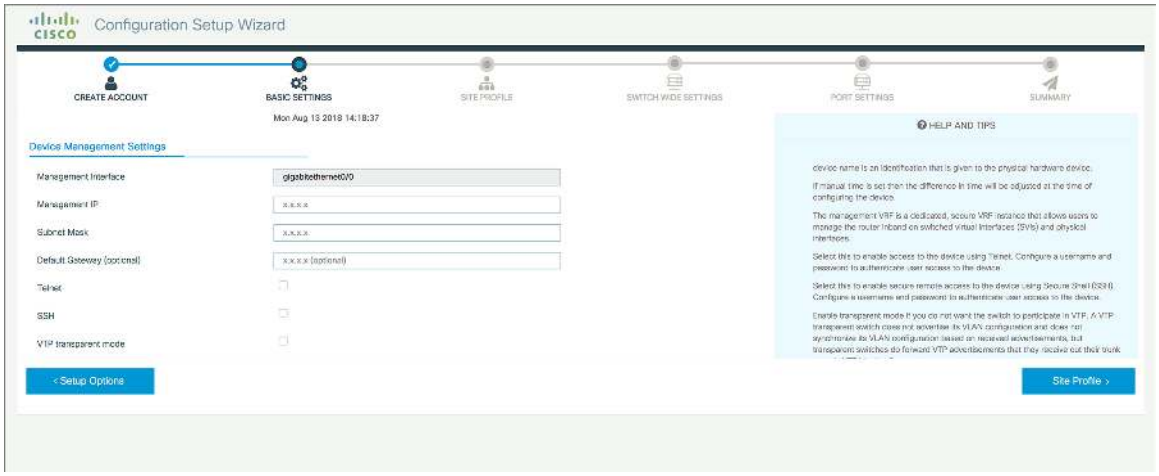

Configuring Your Device Based on a Site Profile

To ease your configuration tasks and save time, choose a site profile based on where your device may be installed and managed in your network. Based on the site profile you choose, your device is automatically configured according to Cisco best practices. You can easily modify this default configuration, from the corresponding detailed configuration screens.

Choosing a site profile as part of Quick Setup allows you to configure your device based on the business needs of your enterprise. For example, you could use your device as an access switch, to connect client nodes and endpoints on your network, or as a distribution switch, to route packets between subnets and VLANs.

Table 32: Default Configuration Loaded with Each Site Profile (Access Switches)

Setting	Single Access Switch (Single Uplink)	Single Access Switch (Single Port Channel Uplink)	Single Access Switch (Redundant Port Channel Uplink)
Hostname	The hostname or device name you provided as part of Quick Setup	The hostname or device name you provided as part of Quick Setup	The hostname or device name you provided as part of Quick Setup
Spanning Tree Mode	RPVST+	RPVST+	RPVST+
VTP	Mode Transparent	Mode Transparent	Mode Transparent
UDLD	Enabled	Enabled	Enabled
Error Disable Recovery	Recovery mode set to Auto	Recovery mode set to Auto	Recovery mode set to Auto
Port Channel Load Balance	Source Destination IP	Source Destination IP	Source Destination IP

Setting	Single Access Switch (Single Uplink)	Single Access Switch (Single Port Channel Uplink)	Single Access Switch (Redundant Port Channel Uplink)
SSH	Version 2	Version 2	Version 2
SCP	Enabled	Enabled	Enabled
VTY Access to Switch	Enabled	Enabled	Enabled
Service Timestamp	Enabled	Enabled	Enabled
VLAN	The following VLANs are created: • Default VLAN • Data VLAN • Voice VLAN • Management VLAN	The following VLANs are created: • Default VLAN • Data VLAN • Voice VLAN • Management VLAN	The following VLANs are created: • Default VLAN • Data VLAN • Voice VLAN • Management VLAN
Management Interface	Layer 3 settings configured on the management port, based on Quick Setup	Layer 3 settings configured on the management port, based on Quick Setup	Layer 3 settings configured on the management port, based on Quick Setup
IPv6 Host Policy	IPv6 host policy created	IPv6 host policy created	IPv6 host policy created
QoS Policy for Downlink Ports	Auto QoS Policy for Access defined	Auto QoS Policy for Access defined	Auto QoS Policy for Access defined
QoS Policy for Uplink Ports	QoS Policy for Distribution created	QoS Policy for Distribution created	QoS Policy for Distribution created
Uplink Interfaces	Selected uplink interfaces configured as trunk ports, set to allow all VLANs	Selected ports configured as Port-channel in trunk mode, set to allow all VLANs.	Selected ports configured as Port-channel in trunk mode, set to allow all VLANs.
Downlink Interfaces	Downlink ports configured in Access mode	Downlink ports configured in Access mode	Downlink ports configured in Access mode
Port-channel	Not configured	Port-channel to distribution created	Port-channel to distribution created

Figure 60: Site Profile - Access Switches

Figure 61: Site Profile - Access Switches (with Routed Access)

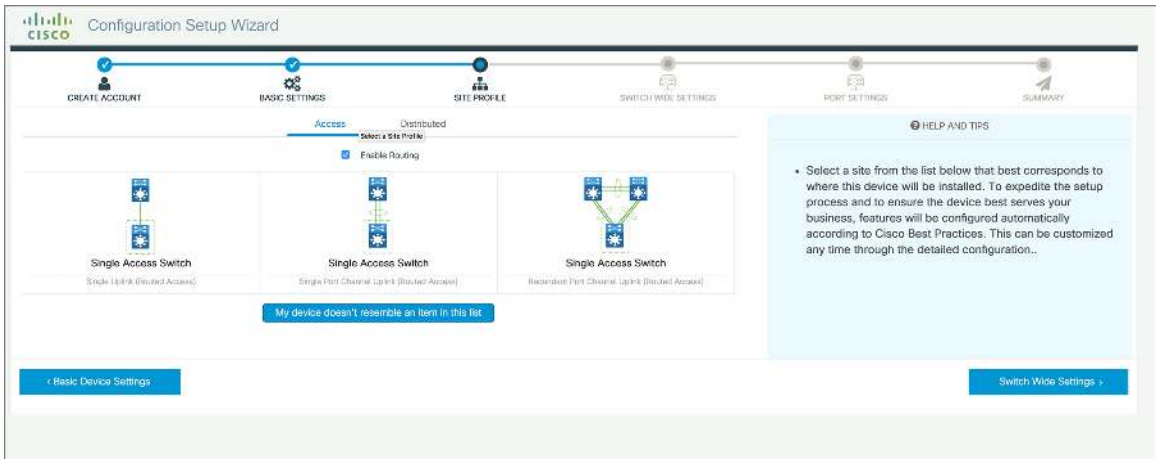

Table 33: Default Configuration Loaded with Each Site Profile (Distribution Switches)

Setting	Single Distribution Switch (Single Downlink)	Single Distribution Switch (Single Port Channel Downlink)	Redundant Distribution Switch (Port Channel Peer and Downlink)
Hostname	The hostname or device name you provided as part of Quick Setup	The hostname or device name you provided as part of Quick Setup	The hostname or device name you provided as part of Quick Setup
Spanning Tree Mode	RPVST+	RPVST+	RPVST+
VTP	Mode Transparent	Mode Transparent	Mode Transparent
UDLD	Enabled	Enabled	Enabled
Error Disable Recovery	Recovery mode set to Auto	Recovery mode set to Auto	Recovery mode set to Auto

Setting	Single Distribution Switch (Single Downlink)	Single Distribution Switch (Single Port Channel Downlink)	Redundant Distribution Switch (Port Channel Peer and Downlink)
Port Channel Load Balance	Source Destination IP	Source Destination IP	Source Destination IP
SSH	Version 2	Version 2	Version 2
SCP	Enabled	Enabled	Enabled
VTY Access to Switch	Enabled	Enabled	Enabled
Service Timestamp	Enabled	Enabled	Enabled
VLAN	The following VLANs are created: • Default VLAN • Data VLAN • Voice VLAN • Management VLAN	The following VLANs are created: • Default VLAN • Data VLAN • Voice VLAN • Management VLAN	The following VLANs are created: • Default VLAN • Data VLAN • Voice VLAN • Management VLAN
Management Interface	Layer 3 settings configured on the management port, based on Quick Setup	Layer 3 settings configured on the management port, based on Quick Setup	Layer 3 settings configured on the management port, based on Quick Setup
QoS Policy	QoS Policy for Distribution defined	QoS Policy for Distribution defined	QoS Policy for Distribution defined
Uplink Interfaces	Selected uplink ports connect to other distribution or core switches	Selected uplink ports connect to other distribution or core switches	Selected uplink ports connect to other distribution or core switches
Downlink Interfaces	Downlink connections to access switches configured in Trunk mode	Downlink connections to access switches configured in Trunk mode	Downlink connections to access switches configured in Trunk mode
Port-channel	Port-channel to core created	Port-channel to core or access created	Port-channel to core or distribution created

Figure 62: Site Profile - Distribution Switches

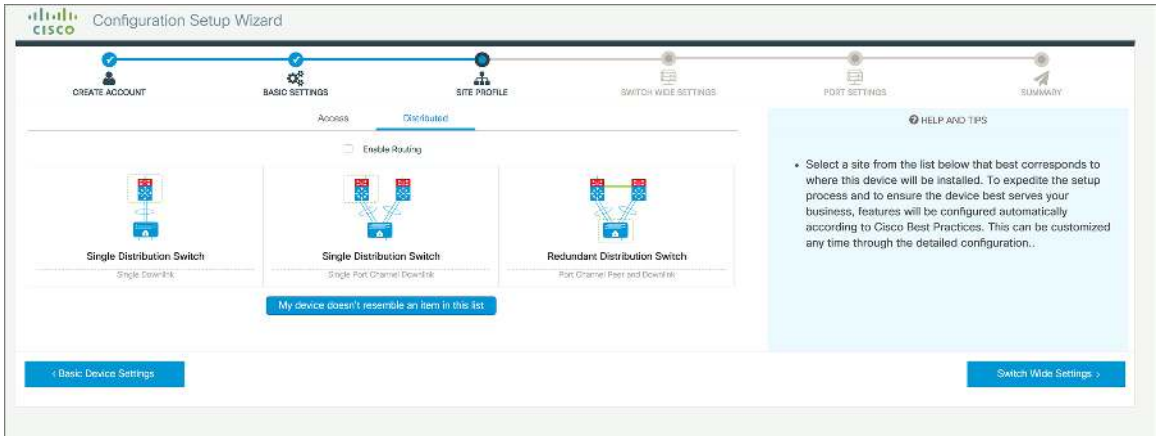

Figure 63: Site Profile - Distribution Switches (with Routed Access)

Table 34: Default Configuration Loaded with Each Site Profile (Core Switches)

Setting	Standalone Core Switch (with ECMP Peers)	Standalone Collapsed Core Switch (with ECMP Peer and Port Channel Downlink)
Hostname	The hostname or device name you provided as part of Quick Setup	The hostname or device name you provided as part of Quick Setup
UDLD	Enabled	Enabled
Error Disable Recovery	Recovery mode set to Auto	Recovery mode set to Auto
Port Channel Load Balance	Source Destination IP	Source Destination IP
SSH	Version 2	Version 2
SCP	Enabled	Enabled
VTY Access to Switch	Enabled	Enabled

Setting	Standalone Core Switch (with ECMP Peers)	Standalone Collapsed Core Switch (with ECMP Peer and Port Channel Downlink)
Mitigate Address Spoofing	Unicast RPF (uRPF) in strict mode	Unicast RPF (uRPF) in strict mode
Service Timestamp	Enabled	Enabled
Management Interface	Layer 3 settings configured on the management port, based on Quick Setup	Layer 3 settings configured on the management port, based on Quick Setup
QoS Policy	QoS Policy for Distribution/Core defined	QoS Policy for Distribution/Core defined
Uplink Interfaces	Selected uplink ports connect to MAN/WAN device	Selected uplink ports connect to MAN/WAN device
Downlink Interfaces	Downlink connections to access switches	Downlink connections to distribution switches
Cross-connect Interfaces	Selected ports connect to other core switches	Selected ports connect to other core switches

Figure 64: Site Profile - Core Switches

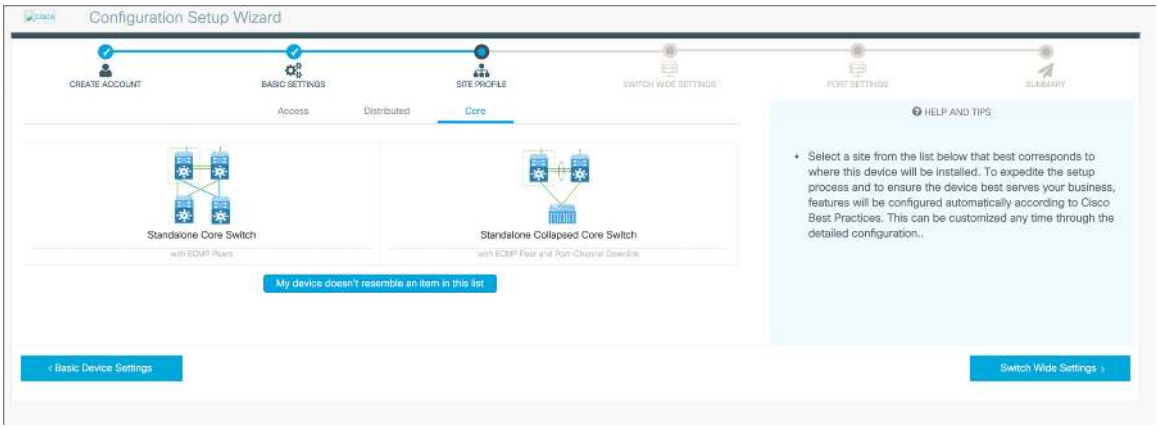

Configuring Switch Wide Settings

Configuring VLAN Settings

Procedure

Step 1 In the **VLAN Configuration** section, you can configure both data and voice VLANs. Type a name for your data VLAN.

Step 2 To configure a data VLAN, ensure that the **Data VLAN** check box is checked, type a name for your VLAN, and assign a VLAN ID to it. If you are creating several VLANs, indicate only a VLAN range.

Step 3 To configure a voice VLAN, ensure that the **Voice VLAN** check box is checked, type a name for your VLAN, and assign a VLAN ID to it. If you are creating several VLANs, indicate a VLAN range.

Configure STP Settings

Procedure

Step 1 RPVST is the default STP mode configured on your device. You can change it to PVST from the **STP Mode** drop-down list.

Step 2 To change a bridge priority number from the default value 32748, change **Bridge Priority** to Yes and choose a priority number from the drop-down list.

Figure 65: VLAN and STP Settings

Configuring DHCP, NTP, DNS and SNMP Settings

Procedure

Step 1 In the **Domain Details** section, enter a domain name that the software uses to complete unqualified hostnames.

Step 2 Type an IP address to identify the DNS server. This server is used for name and address resolution on your device.

Step 3 In the **Server Details** section, type the IP address of the DNS server that you want to make available to DHCP clients.

Step 4 In the **Syslog Server** field, type the IP address of the server to which you want to send syslog messages.

Step 5 To ensure that your device is configured with the right time, date and timezone, enter the IP address of the NTP server with which you want to synchronize the device time.

Step 6 In the **Management Details** section, type an IP address to identify the SNMP server. SNMPv1, SNMPv2, and SNMPv3 are supported on your device.

Step 7 Specify the **SNMP community** string to permit access to the SNMP protocol.

Figure 66: DHCP, NTP, DNS and SNMP Settings

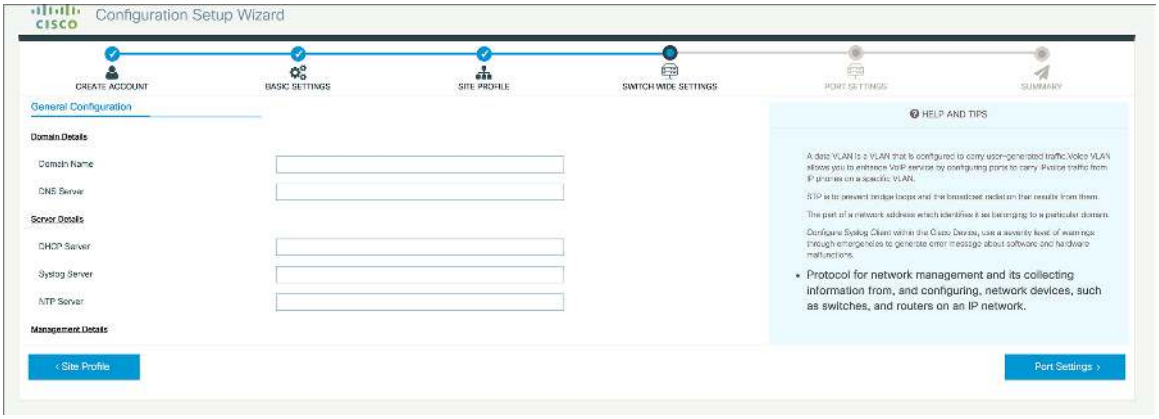

What to do next

Configure port settings.

Configuring Port Settings

Procedure

Step 1 Based on the site profile chosen in the earlier step which is displayed in the left-pane, select the **Port Role** from among the following options:

- Uplink – For connecting to devices towards the core of the network.
- Downlink – For connecting to devices further down in the network topology.
- Access – For connecting guest devices that are VLAN-unaware.

Step 2 Choose an option from the **Select Switch** drop-down list.

Step 3 Make selections from the **Available** list of interfaces based on how you want to enable them and move them to the **Enabled** list.

Figure 67: Port Settings

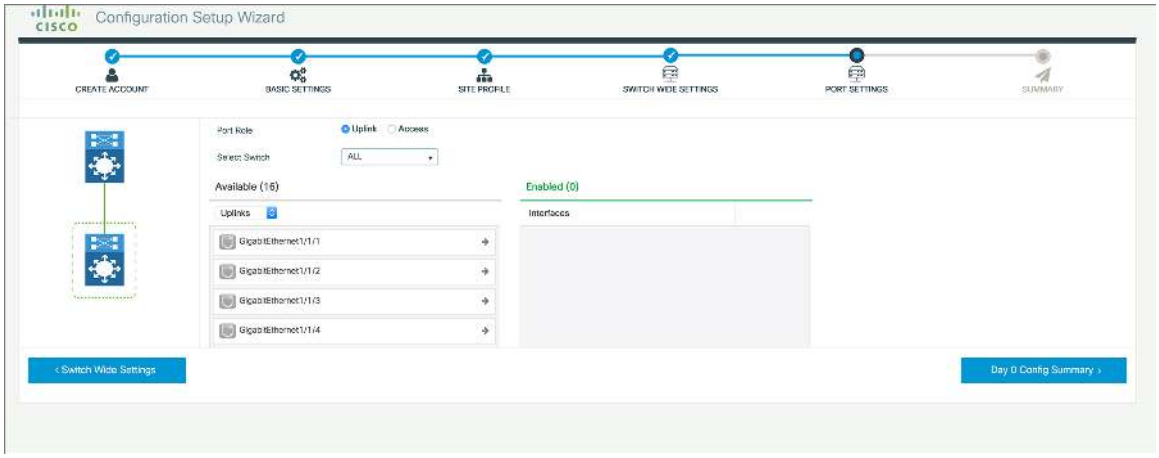

What to do next

- Click **Day 0 Config Summary** to verify your setup.
- Click **Finish**.

Figure 68: Day 0 Config Summary

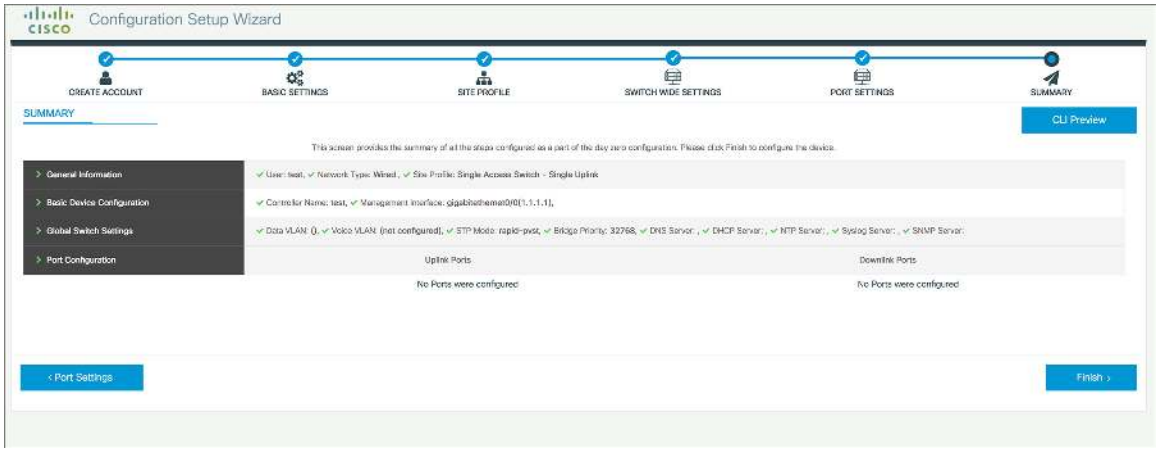

Configuring the Switch Using the CLI

Accessing the CLI Through the Console Port

You can access the CLI on a configured or unconfigured switch by connecting the RJ-45 console port or USB console port of the switch to your PC or workstation and accessing the switch through a terminal emulation program.

Note If you have stacked your switches, connect to the console port of one of the switches in the stack. You can initially configure the entire stack from any member switch.

Connecting the RJ-45 Console Port

Procedure

Step 1 Connect the RJ-45-to-DB-9 adapter cable to the 9-pin serial port on the PC. Connect the other end of the cable to the switch console port.

Step 2 Start the terminal-emulation program on the PC or the terminal. The program, frequently a PC application such as HyperTerminal or ProcommPlus, makes communication between the switch and your PC or terminal possible.

Step 3 Configure the baud rate and character format of the PC or terminal to match the console port default characteristics:

- 9600 baud
- 8 data bits
- 1 stop bit
- No parity
- None (flow control)

Step 4 Power on the switch as described in the switch getting started guide.

Step 5 The PC or terminal displays the bootloader sequence. Press **Enter** to display the setup prompt.

Connecting the USB Console Port

Procedure

Step 1 If you are connecting the switch USB console port to a Windows-based PC for the first time, install the USB driver. See Installing the Cisco Microsoft Windows USB Device Driver, on page 103.

Note USB Type A port on the switch provides file system support and is **NOT** a console port. See USB Type A Port section.

Step 2 Connect a USB cable to the PC USB port. Connect the other end of the cable to the switch mini-B (5-pin-connector) USB console port.

Step 3 Start the terminal-emulation program on the PC or the terminal. The program, frequently a PC application such as HyperTerminal or ProcommPlus, makes communication between the switch and your PC or terminal possible.

Step 4 Configure the baud rate and character format of the PC or terminal to match the console port default characteristics:

- 9600 baud
- 8 data bits
- 1 stop bit
- No parity
- None (flow control)

Step 5 Power on the switch as described in the switch getting started guide.

Step 6 The PC or terminal displays the bootloader sequence. Press **Enter** to display the setup prompt. Follow the steps in the Setup program.

Installing the Cisco Microsoft Windows USB Device Driver

A USB device driver must be installed the first time a Microsoft Windows-based PC is connected to the USB console port on the switch.

Installing the Cisco Microsoft Windows 7 USB Driver

Procedure

Step 1 Obtain the Cisco USB console driver file from the Cisco.com web site and unzip it.

Note You can download the driver file from the Cisco.com site for downloading the switch software.

Step 2 If using 32-bit Windows 7, double-click the setup.exe file in the Windows_32 folder. If using 64-bit Windows 7, double-click the setup(x64).exe file in the Windows_64 folder.

Step 3 The Cisco Virtual Com InstallShield Wizard begins. Click **Next**.

Step 4 The Ready to Install the Program window appears. Click **Install**.

Note If a User Account Control warning appears, click **Allow - I trust this program** to proceed.

Step 5 The InstallShield Wizard Completed window appears. Click **Finish**.

Step 6 Connect the USB cable to the PC and the switch console port. The USB console port LED turns green, and the Found New Hardware Wizard appears. Follow the instructions to complete the driver installation.

Uninstalling the Cisco Microsoft Windows USB Driver

Uninstalling the Cisco Microsoft Windows 7 USB Driver

Before you begin

Disconnect the switch console terminal before uninstalling the driver.

Procedure

Step 1 Run setup.exe for Windows 32-bit or setup(x64).exe for Windows-64bit. Click **Next.**

Step 2 The InstallShield Wizard for Cisco Virtual Com appears. Click **Next.**

Step 3 When the Program Maintenance window appears, select the Remove radio button. Click **Next.**

Step 4 When the Remove the Program window appears, click **Remove.**

Note If a User Account Control warning appears, click **Allow - I trust this program to proceed**.

Step 5 When the InstallShield Wizard Completed window appears, click **Finish.**

APPENDIX A

Technical Specifications

- Environmental and Physical Specifications, on page 105
- Specifications for the Power Supplies, Switches, and Fan, on page 109
- AC Power Cord Specifications, on page 111

Environmental and Physical Specifications

This table describes the environmental specifications.

Table 35: Environmental Specifications for the Switch

Environmental Ranges	
Operating temperature[5]	23 to 113°F (–5 to 45°C)
Storage temperature	–40 to 158°F (–40 to 70°C)
Relative humidity	5 to 90% (noncondensing)
Operating altitude	Up to 10,000 ft (3000 m)
Storage altitude	Up to 15,000 ft (4500 m)

[5] Minimum ambient temperature for cold start is 32°F (0°C)

This table describes the environmental specifications.

Table 36: Environmental Specifications for the Power Supplies

Environmental Ranges	
Operating temperature	23°F to 113°F (–5°C to 45°C) up to 5000 feet (1500m) 23°F to 104°F (–5°C to 40ºC) up to 10,000 feet (3000m)
Storage temperature	–40 to 158°F (–40 to 70°C)
Relative humidity	10 to 90% (noncondensing)
Altitude	10,000 ft (3,000 m) up to 40°C

Physical Specifications of the Switch

This table describes the maximum dimensions for a switch with FAN FRUs and power supplies installed.

Table 37: Dimensions (H x W x D) of Cisco Catalyst 9300L Series Switches

C9300L-24P-4G	1.73 x 17.5 x 19.2 in. (4.4 x 44.5 x 48.8 cm)
C9300L-24P-4X	1.73 x 17.5 x 19.2 in. (4.4 x 44.5 x 48.8 cm)
C9300L-24T-4G	1.73 x 17.5 x 19.2 in. (4.4 x 44.5 x 48.8 cm)
C9300L-24T-4X	1.73 x 17.5 x 19.2 in. (4.4 x 44.5 x 48.8 cm)
C9300L-48P-4G	1.73 x 17.5 x 19.2 in. (4.4 x 44.5 x 48.8 cm)
C9300L-48T-4G	1.73 x 17.5 x 19.2 in. (4.4 x 44.5 x 48.8 cm)
C9300L-48P-4X	1.73 x 17.5 x 19.2 in. (4.4 x 44.5 x 48.8 cm)
C9300L-48T-4X	1.73 x 17.5 x 19.2 in. (4.4 x 44.5 x 48.8 cm)
C9300L-48PF-4G	1.73 x 17.5 x 19.2 in. (4.4 x 44.5 x 48.8 cm)
C9300L-48PF-4X	1.73 x 17.5 x 19.2 in. (4.4 x 44.5 x 48.8 cm)
C9300L-24UXG-4X	1.73 x 17.5 x 19.2 in. (4.4 x 44.5 x 48.8 cm)
C9300L-24UXG-2Q	1.73 x 17.5 x 19.2 in. (4.4 x 44.5 x 48.8 cm)
C9300L-48UXG-4X	1.73 x 17.5 x 19.2 in. (4.4 x 44.5 x 48.8 cm)
C9300L-48UXG-2Q	1.73 x 17.5 x 19.2 in. (4.4 x 44.5 x 48.8 cm)

This table describes the physical specifications with the FAN FRUs and the power supplies installed.

Table 38: Dimensions (H x W x D) of Cisco Catalyst 9300 Series Switches

C9300-24H	1.73 x 17.5 x 19.2 in. (4.4 x 44.5 x 48.8 cm)
C9300-24P	1.73 x 17.5 x 19.2 in. (4.4 x 44.5 x 48.8 cm)
C9300-24S	1.73 x 17.5 x 20.7 in. (4.4 x 44.5 x 52.6 cm)
C9300-24T	1.73 x 17.5 x 19.2 in. (4.4 x 44.5 x 48.8 cm)
C9300-24U	1.73 x 17.5 x 19.2 in. (4.4 x 44.5 x 48.8 cm)
C9300-24UB	1.73 x 17.5 x 19.2 in. (4.4 x 44.5 x 48.8 cm)
C9300-24UX	1.73 x 17.5 x 20.2 in. (4.4 x 44.5 x 51.3 cm)
C9300-24UXB	1.73 x 17.5 x 20.2 in. (4.4 x 44.5 x 51.3 cm)
C9300-48H	1.73 x 17.5 x 19.2 in. (4.4 x 44.5 x 48.8 cm)
C9300-48P	1.73 x 17.5 x 19.2 in. (4.4 x 44.5 x 48.8 cm)

C9300-48S	1.73 x 17.5 x 20.7 in. (4.4 x 44.5 x 52.6 cm)
C9300-48T	1.73 x 17.5 x 19.2 in. (4.4 x 44.5 x 48.8 cm)
C9300-48U	1.73 x 17.5 x 19.2 in. (4.4 x 44.5 x 48.8 cm)
C9300-48UB	1.73 x 17.5 x 19.2 in. (4.4 x 44.5 x 48.8 cm)
C9300-48UN	1.73 x 17.5 x 22.2 in. (4.4 x 44.5 x 51.3 cm)
C9300-48UXM	1.73 x 17.5 x 22.2 in. (4.4 x 44.5 x 51.3 cm)

Table 39: Weight Measurements of Switches

Cisco Catalyst 9300L Series Switches	C9300L-24P-4G: 14.99 lb (6.81 kg) C9300L-24P-4X: 14.99 lb (6.81 kg) C9300L-24T-4G: 14.93 lb (6.78 kg) C9300L-24T-4X: 14.93 lb (6.78 kg) C9300L-48P-4G: 15.46 lb (7.03 kg) C9300L-48T-4G: 15.41 lb (7.0 kg) C9300L-48P-4X: 15.46 lb (7.03 kg) C9300L-48T-4X: 15.41 lb (7.01 kg) C9300L-48PF-4G: 15.48 lb (7.03 kg) C9300L-48PF-4X: 15.48 lb (7.03 kg) C9300L-24UXG-4X: 15.73 lb (7.12 kg) C9300L-24UXG-2Q: 16.01 lb (7.26 kg) C9300L-48UXG-4X: 16.86 lb (7.65 kg) C9300L-48UXG-2Q: 16.86 lb (7.65 kg)

Cisco Catalyst 9300 Series Switches	C9300-24H: 16.63 lb (7.54 kg) C9300-24P: 16.33 lb (7.4 kg) C9300-24S: 14.42 lb (6.54 kg) C9300-24T: 16.03 lb (7.27 kg) C9300-24U: 16.63 lb (7.54 kg) C9300-24UB: 16.63 lb (7.54 kg) C9300-24UX: 18.18 lb (8.25 kg) C9300-48H: 17.03 lb (7.72 kg) C9300-24UXB: 18.18 lb (8.25 kg) C9300-48P: 16.73 lb (7.59 kg) C9300-48S: 14.91 lb (6.76 kg) C9300-48T: 16.43 lb (7.45 kg) C9300-48U: 17.03 lb (7.72 kg) C9300-48UB: 17.03 lb (7.72 kg) C9300-48UN: 20.05 lb (9.09 kg) C9300-48UXM: 20.5 lb (9.34 kg)

Physical Specifications of Power Supplies

Weight	
PWR-C1-1100WAC	3 lb (1.4 kg)
PWR-C1-715WAC	2.8 lb (1.3 kg)
PWR-C1-350WAC	2.6 lb (1.2 kg)
PWR-C1-1100WAC-P	3.1 lb (1.4 kg)
PWR-C1-715WAC-P	2.6 lb (1.2 kg)
PWR-C1-350WAC-P	2.3 lb (1.2 kg)
PWR-C1-715WDC	2.8 lb (1.3 kg)
Dimensions (H x D x W) The dimensions shown include the extraction handle and the keying feature.	
PWR-C1-1100WAC	1.58 X 3.25 X 13.7 in. (40.1 X 82.55 X 348.2 mm)
PWR-C1-715WAC	1.58 X 3.25 X 12.20 in. (40.1 X 82.55 X 309.9 mm)
PWR-C1-350WAC	1.58 X 3.25 X 12.20 in. (40.1 X 82.55 X 309.9 mm)
PWR-C1-1100WAC-P	1.58 X 3.25 X 13.7 in. (40.1 X 82.55 X 348.2 mm)

PWR-C1-715WAC-P	1.58 X 3.25 X 12.20 in. (40.1 X 82.55 X 309.9 mm)
PWR-C1-350WAC-P	1.58 X 3.25 X 12.20 in. (40.1 X 82.55 X 309.9 mm)
PWR-C1-715WDC	1.58 X 3.25 X 12.20 in. (40.1 X 82.55 X 309.9 mm)

Specifications for the Power Supplies, Switches, and Fan

Table 40: Power Specifications for the AC Power

Power Requirements	
Maximum output power	• PWR-C1-1100WAC and PWR-C1-1100WAC-P: 1100 W • PWR-C1-715WAC and PWR-C1-715WAC-P: 715 W • PWR-C1-350WAC and PWR-C1-350WAC-P: 350 W
Input voltage and frequency	• PWR-C1-1100WAC and PWR-C1-1100WAC-P: 1100 W, 115 to 240 VAC (autoranging) 50-60 Hz • PWR-C1-715WAC and PWR-C1-715WAC-P: 715 W, 100 to 240 VAC(autoranging) 50-60 Hz • PWR-C1-350WAC and PWR-C1-350WAC-P: 350 W, 100 to 240 VAC(autoranging) 50-60 Hz
Input current	• PWR-C1-1100WAC and PWR-C1-1100WAC-P: 12–6 A • PWR-C1-715WAC and PWR-C1-715WAC-P: 10–5 A • PWR-C1-350WAC and PWR-C1-350WAC-P: 4–2 A
Output ratings	• PWR-C1-1100WAC and PWR-C1-1100WAC-P: –56 V@19.64 A • PWR-C1-715WAC and PWR-C1-715WAC-P: –56 V@12.8 A • PWR-C1-350WAC and PWR-C1-350WAC-P: –56 V@6.25 A
Total input BTU[6]	• PWR-C1-1100WAC: 4211 BTUs per hour, 1234 W • PWR-C1-1100WAC-P: 4147 BTUs per hour, 1215 W • PWR-C1-715WAC: 2774 BTUs per hour, 813 W • PWR-C1-715WAC-P: 2723 BTUs per hour, 798 W • PWR-C1-350WAC: 1375 BTUs per hour, 403 W • PWR-C1-350WAC-P: 1348 BTUs per hour, 395 W

Power Requirements	
Total output BTU	• PWR-C1-1100WAC: 3754 BTUs per hour, 1100 W • PWR-C1-1100WAC-P: 3754 BTUs per hour, 1100 W • PWR-C1-715WAC: 2440 BTUs per hour, 715 W • PWR-C1-715WAC-P: 2440 BTUs per hour, 715 W • PWR-C1-350WAC: 1194 BTUs per hour, 350 W • PWR-C1-350WAC-P: 1194 BTUs per hour, 350 W

[6] The total input and total output BTU ratings refer to input power to the power supply and output power to the switch. The BTU ratings are based on 100 VAC for the 350-W and 715-W power supplies and 115 VAC for the 1100-W power supply.

Table 41: Power Specifications for DC Power

Power Requirements	
Maximum output power	PWR-C1-715WDC: 715 W
Input current	PWR-C1-715WDC: 24–12 A
Output ratings	PWR-C1-715WDC: -56 V at 12.8 A
Input voltage range domestic	PWR-C1-715WDC: –36 VDC (minimum), –48 VDC (nominal), –72 VDC (maximum)
Voltage range international	PWR-C1-715WDC: –36 VDC (minimum), –48 VDC (nominal), –72 VDC (maximum)
Total input BTU[7]	PWR-C1-715WDC: 2777 BTUs per hour, 715 W
Total output BTU	PWR-C1-715WDC: 2440 BTUs per hour
Wire gauge for ground connection	PWR-C1-715WDC: 12 AWG or 8 AWG
Branch circuit protection	PWR-C1-715WDC: 20 A

[7] The total input and total output BTU ratings refer to input power to the power supply and output power to the switch. The BTU ratings are based on -40 VDC.

Table 42: Fan Module Environmental and Physical Specifications

Environmental Ranges	
Operating temperature	23 to 176°F (–5 to 80°C)
Storage temperature	–40 to 185°F (–40 to 85°C) up to 15,000 ft (4500 m)
Relative humidity	5 to 95% (noncondensing)
Altitude	Up to 13,000 ft (4000 m)

Physical Specification	
Dimensions (H x D x W)	1.62 x 1.73 x 4.24 in. (4.11 x 4.39 x 10.76 cm)
Weight (for three fans)	0.48 lb (0.21 kg)
Operating Specification	
Airflow	20 cfm

AC Power Cord Specifications

The following table lists the specifications for the AC power cords that are available for the AC-input power supply.

Table 43: AC Power Cords

Locale	Part Number	Cordset Rating
North America	CAB-TA-NA	125 VAC, 12 A
Australia	CAB-TA-AP	250 VAC, 10 A
Argentina	CAB-TA-AR	250 VAC, 10 A
Switzerland	CAB-TA-SW	250 VAC, 10 A
United Kingdom	CAB-TA-UK	250 VAC, 10 A
Japan	CAB-TA-JP	125 VAC, 12 A
Japan	CAB-TA-250VAC-JP	250 VAC, 12 A
Europe	CAB-TA-EU	250 VAC, 10 A
Italy	CAB-TA-IT	250 VAC, 10 A
India	CAB-TA-IN	250 VAC, 10 A
China	CAB-TA-CN	250 VAC, 10 A
Denmark	CAB-TA-DN	250 VAC, 10 A
Israel	CAB-TA-IS	250 VAC, 16 A
Brazil	CAB-ACBZ-12A	125 VAC, 12 A
Brazil	CAB-ACBZ-10A	250 VAC, 10 A
Cabinet jumper power cord, C14-C15 connectors	CAB-C15-CBN	250 VAC, 13 A

APPENDIX B

Connector and Cable Specifications

- Connector Specifications, on page 113
- Console Port, on page 115
- Cables and Adapters, on page 115

Connector Specifications

10/100/1000 Ports (Including PoE)

All 10/100/1000 ports use standard RJ-45 connectors and Ethernet pinouts.

Figure 69: 10/100/1000 Port Pinouts

Pin	Label
1	TP0+
2	TP0-
3	TP1+
4	TP2+
5	TP2-
6	TP1-
7	TP3+
8	TP3-

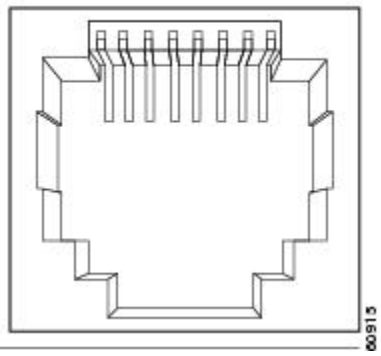

SFP Module Connectors

Figure 70: Duplex LC Cable Connector

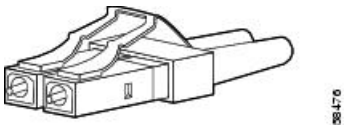

Figure 71: Simplex LC Cable Connector

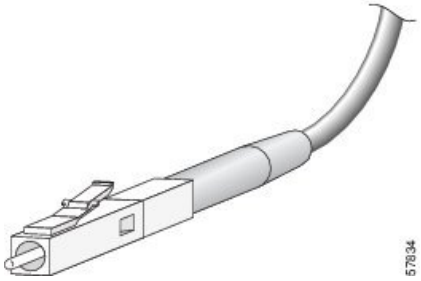

Figure 72: Copper SFP Module LC Connector

Pin	Label
1	TP0+
2	TP0-
3	TP1+
4	TP2+
5	TP2-
6	TP1-
7	TP3+
8	TP3-

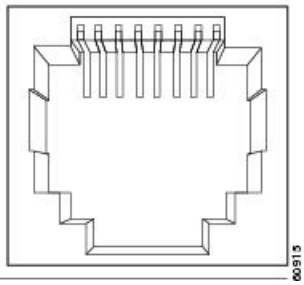

MPO-12 Connectors

The multi-fiber push on (MPO) connector is a 12-fiber optical connector with a footprint similar to the SC simplex connector. The MPO connector conforms to the TIA/EIA-604-5 intermateability standard. It is used for establishing 40G and 100G optical parallel connections.

Figure 73: MPO-12 Fiber-Optic Connector

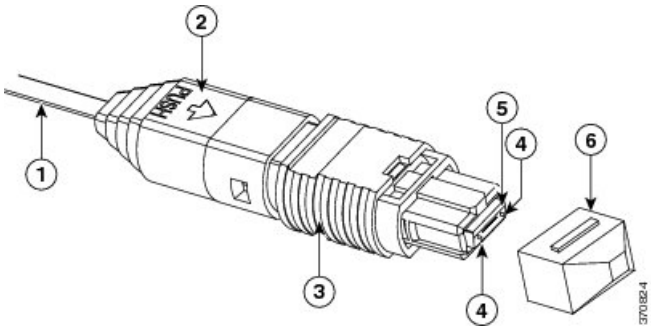

1	12-fiber ribbon	4	Guide pins
2	Boot	5	Ferrule
3	Housing assembly	6	Dust cap

Note You have to attach an adapter cable to this connector.

Console Port

The switch has two console ports: a USB 5-pin mini-Type B port on the front panel and an RJ-45 console port on the rear panel.

Figure 74: USB Mini-Type B Port

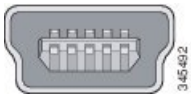

The USB console port uses a USB Type A to 5-pin mini-Type B cable. The USB Type A-to-USB mini-Type B cable is not supplied. You can order an accessory kit (part number 800-33434) that contains this cable.

Figure 75: USB Type A-to-USB 5-Pin Mini-Type B Cable

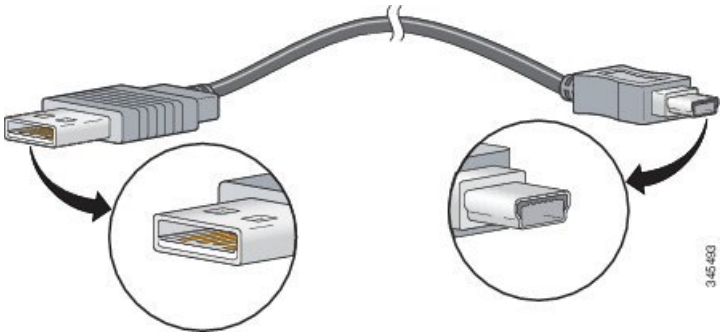

The RJ-45 console port uses an 8-pin RJ-45 connection. The supplied RJ-45-to-DB-9 adapter cable is used to connect the console port of the switch to a console PC. You need to provide a RJ-45-to-DB-25 female DTE adapter if you want to connect the switch console port to a terminal.

Cables and Adapters

StackWise Accessories

All Cisco stack cables are halogen-free. The StackWise cables of lengths 0.5 m, 1 m and 3 m supported. You can order the stacking cables from your Cisco sales representative.

Table 44: Cisco StackWise-480 Accessories

Product ID	Product Description
STACK-T1-50CM	Cisco StackWise-480 50cm stacking cable
STACK-T1-1M	Cisco StackWise-480 1m stacking cable

Product ID	Product Description
STACK-T1-3M	Cisco StackWise-480 3m stacking cable

The optional StackWise-320 kit for Catalyst 9300L Series fixed uplink models consists of two stack adapters and a stacking cable. The default stacking cable is 0.5 m, however options of 1m and 3m are also available.

Table 45: Cisco StackWise-320 Accessories

Product ID	Product Description
C9300L-STACK-KIT	Stack kit for C9300L switches that includes 2 stack adaptors and 1 stack cable
STACK-T3-50CM	Cisco StackWise-320 50cm stacking cable
STACK-T3-1M	Cisco StackWise-320 1m stacking cable
STACK-T3-3M	Cisco StackWise-320 3m stacking cable

Table 46: StackWise Cables Minimum Bend Radius and Coiled Diameter

Cable Part Number	Cable Length	Minimum Bend Radius	Minimum Coiled Diameter
STACK-T1-50CM	1.64 feet (0.5 m)	1.6 in. (41 mm)	Not applicable
STACK-T1-1M	3.28 feet (1.0 m)	1.6 in. (41 mm)	5.2 in. (132 mm)
STACK-T1-3M	9.84 feet (3.0 m)	3.2 in. (82 mm)	7.17 in. (182 mm)
STACK-T3-50CM	1.64 feet (0.5 m)	1.6 in. (41 mm)	Not applicable
STACK-T3-1M	3.28 feet (1.0 m)	1.6 in. (41 mm)	5.20 in. (132 mm)
STACK-T3-3M	9.84 feet (3.0 m)	3.2 in. (82 mm)	7.17 in. (182 mm)

1. With a 0.5m cable, the minimum coiled diameter is negligible and the cable cannot be physically coiled without exceeding the bending limit.

Transceiver Module Network Cables

For cabling specifications, refer to the following notes:

- Cisco SFP and SFP+ Transceiver Module Installation Notes
- Cisco 40-Gigabit QSFP+ Transceiver Modules Installation Note

Each port must match the wavelength specifications on the other end of the cable, and the cable must not exceed the stipulated cable length. Copper 1000BASE-T SFP module transceivers use standard four twisted-pair, Category 5 cable at lengths up to 328 feet (100 meters).

Cable Pinouts

Figure 76: Four Twisted-Pair Straight-Through Cable Schematic

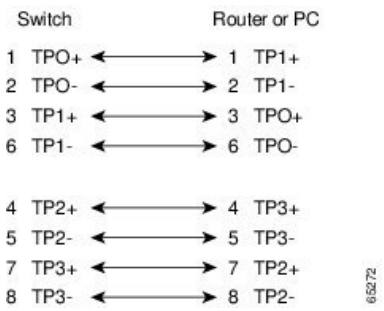

Figure 77: Four Twisted-Pair Semi-Cross Cable Schematic

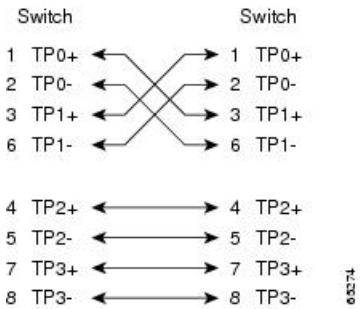

Figure 78: Two Twisted-Pair Straight-Through Cable Schematic

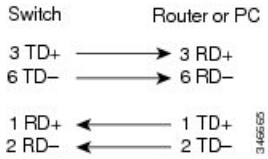

Figure 79: Two Twisted-Pair Crossover Cable Schematic

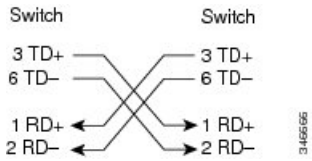

Identifying a Crossover Cable

To identify a crossover cable, compare the two modular ends of the cable. Hold the cable ends side-by-side, with the tab at the back. The wire connected to the pin on the outside of the left plug should be a different color from the wire connected to the pin on the inside of the right plug.

Figure 80: Identifying a Crossover Cable

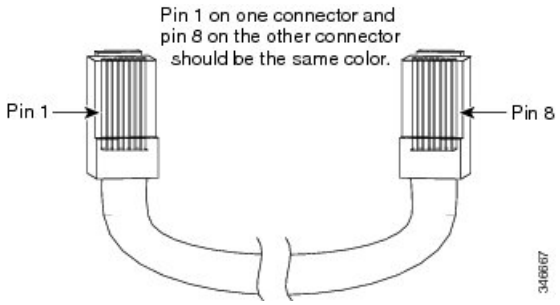

Console Port Adapter Pinouts

The RS-232 console port uses an 8-pin RJ-45 connector. Use an RJ-45-to-DB-9 adapter cable to connect the switch console port to a console PC. You need to provide a RJ-45-to-DB-25 female DTE adapter to connect the switch console port to a terminal.

Table 47: Console Port Signaling with a DB-9 Adapter

Switch Console Port (DTE)	RJ-45-to-DB-9 Terminal Adapter	Console Device
Signal	**DB-9 Pin**	**Signal**
RTS	8	CTS
DTR	6	DSR
TxD	2	RxD
GND	5	GND
GND	5	GND
RxD	3	TxD
DSR	4	DTR
CTS	7	RTS

Table 48: Console Port Signaling with a DB-25 Adapter

Switch Console Port (DTE)	RJ-45-to-DB-25 Terminal Adapter	Console Device
Signal	**DB-25 Pin**	**Signal**
RTS	5	CTS
DTR	6	DSR
TxD	3	RxD
GND	7	GND

Switch Console Port (DTE)	RJ-45-to-DB-25 Terminal Adapter	Console Device
Signal	**DB-25 Pin**	**Signal**
GND	7	GND
RxD	2	TxD
DSR	20	DTR
CTS	4	RTS

Connector and Cable Specifications